Eickhoff Hall Hot Water Tanks Replacement

TCNJ Advertised Bid # AB250018

COVER SHEET

INVITATION TO BID

MILESTONE SCHEDULE

CONSTRUCTION BID PROPOSAL FORM

MANDATORY DOCUMENTS

CONTRACT

GENERAL CONDITIONS

GENERAL WORK DESCRIPTION

DRAWINGS

April 1, 2025

Please place the following advertisement in the Legal Section of Classified Advertising. Please ensure that the invoice for this advertisement is prepared and an affidavit forwarded to The College of New Jersey, Office of Finance and Business Services, Administrative Services Building, Room 201, P.O. Box 7718, Ewing, NJ 08628-0718.

To be published on **April 1, 2025 in the Trentonian.** Contact person regarding placement of ad is Lauren Manning (609) 771-2894.

THE COLLEGE OF NEW JERSEY
ADVERTISEMENT FOR BIDS
BID #AB250018

Under the provisions of the State College Contracts Law, Chapter 64 of Title 18A, The College of New Jersey will receive sealed bids for **Eickhoff Hall Hot Water Tanks Replacement** until **2:00 P.M. on the 22nd day of April 2025** at The College's Office of Finance and Business Services, Administrative Services Building, Second Floor, Room 201, Route 31 (Pennington Road), Ewing Township, New Jersey. At 2:00 P.M. all bids will be publicly opened and read in Room 203 of the Administrative Services Building.

The project will be bid as a Single Lump Sum.

No bidder may submit more than one bid.

Bid Documents may be obtained on/after **April 1, 2025 via our website (https://bids.tcnj.edu/home/construction-projects/).**

A **pre-bid conference/on-site inspection** is scheduled on **April 3, 2025 at 2:00 P.M**. in Room 203 of the Administrative Services Building, located on The College's Ewing Township, New Jersey campus on Route 31 (Pennington Road). While attendance is not mandatory, bidders are strongly encouraged to attend.

Bidders are required to comply with the requirements of P.L. 1975 c. 127 (N.J.S.A. 10:5-31 et seq. and N.J.A.C. 17:27 - Affirmative Action); the New Jersey Prevailing Wage Act, N.J.S.A. 34:11-56.25 et seq.; N.J.S.A. 52:25-24.2, "Statement of Ownership Disclosure"; the Public Works Contractor Registration Act (N.J.S.A. 34:11-56.48 et seq.); the New Jersey Business Registration of Public Contractors provisions (N.J.S.A. 52:32-44) and all amendments thereto.

A bid guarantee is required in the amount of 10% of the total bid. Bid guarantee shall consist of a certified check or cashier's check to the order of The College of New Jersey, or an individual or annual bid bond issued by an insurance company or surety company authorized to do business in the State of New Jersey. The successful Bidder(s) is required to provide a Performance and Payment Bond equal to 100% of the contract. A Surety Disclosure Statement and Certification form must accompany the performance bond.

The College will award the contract to the lowest responsible bidder who satisfies the qualification criteria as set forth in the contract documents.

The College of New Jersey reserves the right to reject all bids or to waive any minor informalities in the bidding in accordance with law. No bid shall be withdrawn for a period of sixty (60) days subsequent to the opening of bids without the consent of The College of New Jersey.

The College requires that its contractors/vendors agree to take all necessary and responsible steps, in accordance with N.J.S.A. 52:32-17 et seq. and N.J.A.C. 17:13-1 et seq. to ensure that SBE's have these opportunities, as an aid in meeting the commitment of its SBE Programs and to ensure that DVOBs have these opportunities per N.J.S.A. 52:32-31.1 et seq. (P.L. 2015, c. 116) in meeting the commitment of its DVOB Programs.

Eickhoff Hall Hot Water Tanks Replacement

MILESTONE SCHEDULE

April 1, 2025

Bids Released	4/1/25
*Pre-bid Meeting, 2:00 pm, ASB 203	4/3/25
Last day for questions	4/9/25
Addendum issued, if needed	4/11/25
Bids due to TCNJ 2:00 pm	4/22/25
Notice of Intent to Award Issued	4/23/25
Notice to Proceed Issued by	4/30/25
Kick-off Meeting	5/1/25
Pre-Construction (Submittals + Permitting)	5/1/25-5/31/25
Mobilize and Start construction	5/27/25
Substantial Completion	6/21/25
Project Closeout by	7/30/25

Attendance is not required at the Pre-bid meeting, but strongly encouraged. The meeting will be held in Administrative Services Building, Room 203. Parking is available at the building. We will briefly review the RFP, answer questions, and then take a tour of the building if agreed upon at the meeting.

General Notes:

1. There is a concurrent dishwasher replacement project taking place above this work space. The new dishwasher is slated to be operational by 6/21/25, therefore the hot water tank serving this dishwasher must be operational by that date.
2. Special Olympics NJ will be housed in this building June 6-8, 2025. They need hot water in the dorm rooms. Therefore, the contractor is to make sure hot water is available for these dates. Suggest planning work, gas piping to the new space, exhaust stack work take place prior to this date and then removal of existing piping and equipment after SONJ. Then replace and have tanks ready for 6/21/25 for the new dishwasher use.
3. Allowance: an allowance of $25,000 dollars shall be included in the bidders bid amount for unforeseen items not anticipated in the design documents.
4. Any reference to a specification section that is not included in these bidding documents shall mean these bidding documents do not require said spec section to be a part of these bidding documents.
5. Any reference in these bidding documents to the bidder paying permit fees shall be disregarded by the bidders: TCNJ pays for all permit fees. The contractor will fill out the permit applications as usual and give to TCNJ for submission to DCA. TCNJ will then pay the permit fee.
6. Spec section 223000-1 references spec section 017800. This should make reference to spec section 013300.

Bid # AB250018

For: Eickhoff Hall Hot Water Tanks Replacement

Event	Date	Time
Pre-bid Conference and Site Visit at The College of New Jersey's Administrative Services Building, Room # 203	04/03/2025	2:00 PM
Question Cut Off Date (Refer to Bid Section # 2 for more information.)	04/09/2025	4:00 PM
Addendum Date (Refer to Bid Section # 2 for more information.)	04/11/2025	11:00 AM
Bid Submission Due Date (Refer to Bid Section # 3 for more information.)	04/22/2025	2:00 PM

Dates are subject to change. All times contained in the Bid refer to Eastern Time.
All changes will be reflected in Addendum to the Bid posted on the College's website.

Bid Issued By:

The College of New Jersey
Office of Finance & Business Services
Purchasing Department
Administrative Services Building, Room 201
2000 Pennington Road
Ewing, NJ 08628
Phone: (609) 771-2894
https://bids.tcnj.edu/home/construction-projects/
Assigned Purchasing Contact: Lauren Manning
E-mail: manningl@tcnj.edu

Date Issued: 04/1/2025
Fiscal Year: 2025

Required Procurement Documents & Bidder's Checklist

This bid proposal MUST be received by The College of New Jersey, Purchasing Department before or at 2:00 p.m. on Tuesday, April 22, 2025 at which time responses will be publicly opened and read. Any proposal arriving at the Purchasing Department after the submission due date and time will not be accepted.

The following Bidder's Checklist **is provided as an aid to the bidder. It does not in any way relieve the** b**idder of its responsibility to ensure that its bid proposal is complete. It is the bidder's responsibility to ensure documents are submitted and that all requirements of the bid solicitation have been met.**

Procurement Documentation & Bidder's Checklist		
FORMS, REGISTRATIONS, AND CERTIFICATIONS THAT MUST BE SUBMITTED BY THE BIDDER AT THE TIME OF SUBMISSION OF THE BID. FAILURE TO INCLUDE THE BELOW REQUESTED DOCUMENTATION MAY RESULT IN REJECTION OF BIDDER'S SUBMISSION.		
Required		**Vendor's Initials next to each item submitted with proposal**
X	Bidder Information	
X	General Agreement including Acknowledgement of Receipt of Addendum (if any issued)	
X	Cost Sheet	
X	Subcontractor Information Page	
X	Small Business, Minority and/or Female-owned Business Reporting	
X	Acknowledgement of Mandatory Equal Employment Opportunity Language for Construction Contracts (NJAC 17:27-1.1 et seq. - P.L. 1975 C.127)	
X	Completed Statement of Ownership Disclosure (N.J.S.A. 52:25-24.2)	
X	Completed Non-Collusion Affidavit	
X	Completed Vendor Qualification Sheet	
X	Enclosed Certified Check, Cashier's Check or Bid Bond for ten percent (10%) of the amount of the bid	
X	Copy of Electrical and Plumbing Licenses (the license must be valid at the time of bid.)	
	Copy of latest Experience Modification Rating (EMR Safety Rating). The College requires an average rating over the last 5 years of 1.25 or less.	
FORMS, REGISTRATIONS, AND CERTIFICATIONS THAT MUST BE SUBMITTED BY THE BIDDER PRIOR TO AWARD (EXCEPT AS OTHERWISE NOTED BELOW).		
X	Completed Certification of Non-Involvement in Prohibited Activities in Russia (P.L. 2022, c.3)	
X	Completed Disclosure of Investment Activities in Iran (N.J.S.A. 52:32-58)	
X	Completed Federal Non-Debarment Certification (N.J.S.A. 52:32-44.1)	
X	Copy of Public Works Contractor Registration Certificate for the bidder and disclosed subcontractors (the certificate must be valid at the time of bid.)	
X	Proof of Affirmative Action Compliance - Initial Project Workforce Report, AA-201 (must be submitted after notification of award, prior to signing of the contract)	
X	New Jersey Business Registration Certificate (N.J.S.A. 52:32-44)	
X	Taxpayer Identification Request (W-9 Form)	
X	Certificate of Insurance	

THE COLLEGE OF NEW JERSEY
Construction Bid Proposal Form

Office of Finance & Business Services
Administrative Services Building, Rm. 201
2000 Pennington Road
Ewing, New Jersey 08628-0718

Bid Number: AB250018
Bid Due Date: April 22, 2025

Project Name: Eickhoff Hall Hot Water Tanks Replacement

BIDDER INFORMATION

Firm Name:

Contact Person:
Address:

Telephone Number:

Fax Number:

Email Address:
Federal I.D. Number:

SOLICITATION OF CONSTRUCTION BIDS

1. BID PROPOSALS ARE SOLICITED AS FOLLOWS:

A. Single Bid (Lump Sum) which combines all trades.

1. The total number and types of trades are set forth in the Specifications.
2. Bidder enters the Bid Price on the line provided on the Cost Sheet.
3. Pursuant to the requirements of N.J.S.A. 18A:64-76.1., bidder lists the names of the subcontractors on the Subcontractor Information page.

2. THE SCOPE OF WORK INCLUDES:

A. The removal of the existing deteriorated hot water exchangers and the replacement with new gas fired hot water tanks.

B. See Specifications and Drawings for Details (included in Bid package).

C. The College may issue Addenda or Clarifications which may include additions to or deletions from the scope of work; changes to the Specifications, Drawings, and proposal form; and clarifications of requirements. Bidder is advised to review all Addenda and/or clarifications carefully, and shall note the receipt of same with their bid package.

GENERAL INSTRUCTIONS AND REQUIREMENTS

1. PRICES

A. Bidder submits prices for the Base Bid and any Alternate Proposals and Unit Prices which are listed for the contract of the bid. If there is no cost associated with the Alternate or Unit Price, bidder is required to enter "0.00" or "no change".

1. Prevailing wage rates apply (Mercer County).
2. Bid is to remain good for sixty (60) days after the Bid Due Date.

2. QUESTIONS

A. Direct inquiries and correspondence relating to this proposal form and questions regarding the technical specifications and requests for clarification must be submitted in writing via **email to manningl@tcnj.edu** and must be received **prior to 4:00 PM on April 9, 2025.**

B. Should any questions be received, the notice of revisions or addenda to advertisements or bid documents relating to bids shall be published in a legal newspaper or newspapers no later than seven days, Saturdays, Sundays and holidays excepted, prior to the bid due date. The notice shall be provided to any person who has submitted a bid or who has received a bid package, in one of the following ways: in writing by certified mail or (b) by certified facsimile transmission, meaning that the sender's facsimile machine produces a receipt showing date and time of transmission and that the transmission was successful or (c) by a delivery service that provides certification of delivery to the sender.

C. The addendum or clarification will be available on **April 11, 2025 on the College's website at https://bids.tcnj.edu/. If an addendum and/or clarification is posted, it SHOULD be noted in the General Agreement section of the bidder's proposal. Failure to do so may subject Bidder to disqualification.**

3. HOW TO SUBMIT THE COMPLETED CONSTRUCTION BID PROPOSAL FORM

A. Bidder places all pages of the completed form and the requisite additional documents in an envelope, seals the envelope, and labels it with his/her firm name, address, and "Sealed Bid Enclosed for (**Bid Number and Project Name**)".

B. Bidder mails or deliver by hand the sealed bid, no later than **2:00 p.m., April 22, 2025**, to The College of New Jersey, Attention: Lauren Manning for (specify the Bid Number), Office of Finance & Business Services, Room 201, 2000 Pennington Road, Ewing, New Jersey 08628-0718. **At 2:00 p.m., all bids will be publicly opened and read in Room 203 of the Administrative Services Building.**

C. Contractors are advised that the U.S. Postal Service and all express mail companies deliver to The College's Mail Room or Receiving Department, not directly to the Office of Budget & Finance. The College is not responsible for lost or misdirected bids.

4. BOND REQUIREMENTS AND SURETY STANDARDS

A. A bid guarantee is required in the amount of 10% of the total bid. Bid guarantee shall consist of a certified check or cashier's check to the order of The College of New Jersey, or an individual or annual bid bond issued by an insurance company or surety company authorized to do business in the State of New Jersey. The successful bidder must submit a Performance and Payment Bond equal to 100% of the contract. A completed Surety Disclosure Statement and Certification must accompany the Performance and Payment Bond.

1. The Performance and Payment Bond form and a sample Surety Disclosure Statement and Certification form are included at the end of this Construction Bid Proposal Form.

C. All bid deposits shall be returned within three (3) days, Sunday and holidays excepted, after the awarding of the contract and the approval of the successful bidder's performance bond, if any, the bid guaranty of the remaining bidders shall be returned to them.

D. Should the successful bidder fail to enter into said contract after acceptance of bid by the College, then the check or security deposited by that bidder shall, at the option of the College, be retained as liquidated damages, or if Bid Bond has been supplied, principal and surety shall be liable to the amount of the Bid Bond.

E. Attorneys-in-fact who sign bid bonds or contract bonds must file with each bond a certified copy of their Power of Attorney to sign said bonds.

F. Contractor shall provide a Maintenance Bond at job completion for a period of one year for 100% of the final contract price.

5. LICENSES, CERTIFICATIONS, REGISTRATIONS, QUALIFICATIONS

A. The bidder or, as applicable, its subcontractors shall at the time of bid have those required licenses, certifications, registrations, qualifications and the like ("LCRQ") listed below and shall present satisfactory evidence thereof upon request of the College prior to award.

1. The electrical contractor or subcontractor as applicable shall have a valid electrical license.
2. The plumbing contractor or subcontractor as applicable shall have a valid plumbing license.

B. The selected bidder/contractor or, as applicable, its subcontractors shall have and shall present satisfactory evidence of all other required LCRQ noted in the Specifications after execution of contract during the submittal process and prior to the start of the applicable work, unless otherwise requested by the College or a date or event specified for that LCRQ in the Specifications.

6. SUBCONTRACTORS

A. Pursuant to the State Colleges Contract Law, N.J.S.A. 18A:64-76.1, all bids submitted shall set forth the names and license numbers of all subcontractors to whom the bidder intends to subcontract the plumbing and gas fitting work; the refrigeration, the heating and ventilating systems and equipment; the electrical work, including any electrical power plants; tele-data, fire alarm, or security systems; the structural steel and ornamental iron work. The Subcontractor Information sheet is provided for this purpose.

7. CERTIFICATE OF INSURANCE

A. The bidder is required to submit proof of liability insurance in accordance with The College's contract.

8. ACCEPTANCE/REJECTION OF BIDS

A. Pursuant to State College Contract Law, Contracts shall be awarded to the lowest responsible bidder whose bid, conforming to the invitation for bids, will be the most advantageous to the State college.

B. Any award made to the bidder by the College, shall bind the bidder and the bidder's heirs, executors, administrators, successors or assigns.

C. Award of contract shall be made to the lowest responsible bidder, whose bid, conforming to the invitation for bids, is the most advantageous to the College.

D. The award of the contract or the rejection of the bids shall be made within sixty (60) days of the date of receiving bids, unless written extensions are requested by the College and accepted by the bidder(s). All bid securities shall be returned immediately if all bids are rejected. The successful bidder(s) to whom the award is to be made will be notified by receipt of a written "Intent to Award" from the College.

E. When award of contract is made in one fiscal year with effective date in the next fiscal year, award shall be contingent upon the availability and appropriation of sufficient funds for that purpose for the year in which said contract takes effect. When a contract shall be awarded for a period in excess of one year, said contract shall be contingent upon the annual availability and appropriation of sufficient funds for that purpose for each year of the contract term.

9. VENDOR RIGHT TO PROTEST-INTENT TO AWARD

A. Bidders have the right to protest the College's proposed award of the contractor as announced in the notice of intent to award. Unless otherwise stated, a bidder's protest must be received no later than 5-business days after the date on the notice of intent to award. Bidder's protest must be in writing and delivered to the College's Purchasing Department via email. The protests much include the specific grounds for challenging the award. Within one week of receipt of the written protest, the College's Purchasing Director shall give written notification of the College's acceptance or rejection of the protest.

10. WITHDRAWAL OF BIDS

A. A written request for the withdrawal of a bid, or any part thereof, will be granted if the request is received by the College prior to the specified time of the bid opening.

B. Should the bidder refuse to perform the work for the price provided, they will forfeit their bid security.

11. BID COMPLIANCE

A. Bidders desiring to modify TCNJ's general conditions of the construction contract must submit the proposed modifications within the question period set forth in Section 2 or such modifications will not be considered by the College.

B. Any bid not prepared and submitted in accordance with the provisions described herein may be rejected by the College. Any bid received after the time and date specified will not be considered. No bidder shall withdraw a bid within sixty (60) days after the date of the bid opening. Contracts shall be awarded to the lowest responsible bidder whose bid, conforming to the invitation for bids, will be the most advantageous to the State college

C. Any bidder who has defaulted on any contract with the College or any other State Agency may be considered as not responsible and their bid may be rejected. THE COLLEGE OF NEW JERSEY reserves the right to exercise this option, as the College deems proper and/or necessary in accordance with applicable law.

D. Bids shall include all costs of any nature necessary to complete the project in the manner and within the time required by the contract.

E. The College reserves the right to require bidders to provide a schedule of values of their lump sum bid price upon request.

F. The College is exempt from all taxes including Federal Excise Tax, Transportation Taxes, State Excise, Sales Tax and local taxes. Rentals of equipment for 28 days or less is not exempt from any tax under the State sales tax act.

G. Before submitting a bid, the bidder shall be familiar with the Drawings, Specifications, and other Documents that will form part of the contract and the site conditions to confirm for themselves the character and amount of work involved.

H. No bidder shall be allowed to offer more than one price on each item even though he/she may feel that he/she has two or more types or styles that will meet specifications. Bidders must determine for themselves which to offer. This may be cause for automatic rejection of bid.

I. It is understood and agreed that all prices quoted are firm and not subject to any increase during the life of the contract.

J. Should any difference arise between the contracting parties as to the meaning or intent of these instructions or specifications, the College's decision shall be final and conclusive.

K. Should the bidder discover discrepancies in this Request for Bids, the matter shall be at once brought to the attention of the College, and the discrepancies corrected by written agreement before submission of bid. The correction will be issued by addendum.

12. OSHA COMPLIANCE:

A. The Contractor shall guarantee that all materials, supplies and equipment to be provided under his contract shall meet all applicable requirements, Specifications and standards of the Federal Occupational Safety and Health Act (OSHA) of 1970 as amended to date of acceptance by the College, and shall also apply to Contractors Construction procedures.

13. EXAMINATION OF SITE, DRAWINGS AND SPECIFICATIONS

A. Each Bidder should familiarize the site of the proposed work and fully acquaint themselves with the conditions as they exist so that they may fully understand the facilities, difficulties, and restrictions attending the execution of the work under this Contract.

B. Bidders shall also thoroughly examine and be familiar with the Drawings and Specifications. The failure to receive or examine any form, instrument or document, or to visit the site and acquaint himself with conditions there existing shall in no way relieve any bidder from obligation with respect to his bid. By submitting a bid, the bidder agrees and warrants that he is familiarized with the site, the Drawings and Specifications and, that the Specifications and Drawings are adequate and the required result can be produced under the Drawings and Specifications. No claim for any extra will be allowed because of alleged impossibilities in the productions of the results specified or because of unintentional errors or conflicts in the Drawings and Specifications. No change orders will be issued for items, materials or issues that existed on or with respect to the site prior to bidding.

14. DRAWINGS AND SPECIFICATIONS

A. The project shall be performed in accordance with the requirements of the Drawings and Specifications, subject to modification as provided in General Conditions. The Drawings and Specifications are intended to complement and supplement each other.

B. Any work required by either of them and not by the other shall be performed as if denoted in both. Should any work be required which is not also denoted in the Specifications or on the Drawings because of an obvious omission, but which is, nevertheless, necessary for the proper performance of the project, such work shall be performed as fully as if it were described and delineated.

15. FORM OF AGREEMENT

A. Every successful bidder shall be required to sign the standard form contract, a copy of which is attached. Any proposed language or form changes which in any way modifies the contractor's responsibilities as set forth in the Contract Documents will not be acceptable and will be deemed to constitute a bid exception.

16. MULTIPLE BIDS NOT ALLOWED:

A. No bidder is allowed to submit more than one bid from an individual, firm, partnership, corporation or association under the same or different name. This will be cause for automatic rejection of each bid.

17. SUBSTITUTIONS:

A. The bidder may include in their bid substitute materials or equipment or methods in lieu of those specified in the contract documents, but they do so at their own risk. Any substitution must be equivalent in type, function and quality to the item required in the contract. The successful bidder must submit all information required within 20 days of contract award to determine if the proposed substitute is equal to the contract requirements, and any substitution must be approved by the architect and the College.

B. The College may investigate/evaluate/be the sole judge of the equivalency of 'or equals' products. It shall be the Contractor's responsibility to document the equivalence claim. No substitution shall result in any increase in the contract price or times. The successful bidder in its application for the substitution must certify in writing that the substitution is equal to what is specified in the contract documents in all material respects and will not increase the time or price of the contract work.

C. Should the substitution be rejected, the contractor will then be required to provide the specified product, material or method at no additional cost to the College and no change in the project schedule.

18. APPLICABLE LAWS: The following list of statutes and regulations, which may be applicable in whole or in part, is provided for the benefit of the Contractor and is not meant to be all-inclusive. In the event that other laws are applicable, it shall be the responsibility and obligation of the Contractor to ascertain and comply with them.

A. SET ASIDE PROGRAM FOR SMALL BUSINESS ENTERPRISE (SBE): It is the policy of the State entities that small business enterprises ("SBE") as determined and defined by the State of New Jersey, Division of Revenue and Enterprise Services ("Division") in the Department of the Treasury (N.J.A.C.17:13-1.2) have the opportunity to compete for and participate in the performance of contracts and subcontract for construction and for the purchase of goods and services. The State further requires that its contractors/vendors agree to take all necessary and responsible steps, in accordance with N.J.S.A. 52:32-17 et seq. and N.J.A.C. 17:13-1 et seq. to ensure that SBE's have these opportunities, as an aid in meeting the commitment of its SBE Programs. N.J.S.A. 52:32-17 et seq. and Executive Order 71 requires that each State department make a good faith effort to award a total of 25% of the dollar value of contracts for goods and services and construction to eligible small businesses.

B. SET ASIDE PROGRAM FOR DISABLED VETERAN-OWNED BUSINESS (DVOB): In accordance with the New Jersey Set-Aside Act for Disabled Veterans' Businesses, N.J.S.A. 52:32-31.1 et seq. (P.L. 2015, c. 116), it is the policy of State entities that Disabled Veteran-Owned Businesses ("DVOBs"), as determined and defined by the State of New Jersey, Department of Treasury, Division of Revenue and Enterprise Services in N.J.A.C. 17:14-1.1 et seq., have the opportunity to compete for and participate in goods and services contracts and subcontracts for construction services. The

Contractor shall agree to take all necessary and responsible steps, in accordance with the aforementioned regulations, to ensure that DVOBs have these opportunities. N.J.S.A. 52:32-31.1 et seq. (P.L. 2015, c. 116) requires that each State department make a good faith effort to award a total of 3% of the dollar value of contracts for goods and services and construction to eligible DVOBs.

C. **EXECUTIVE ORDER #34 – MINORITY AND WOMEN BUSINESS ENTERPRISES:** On September 15, 2006, Governor Corzine signed Executive Order 34 establishing a Division of Minority and Women Business Development. The Division is charged with administering and monitoring policies, practices, and programs to ensure that minority and women business enterprises (MWBE) are afforded an equal opportunity to participate in New Jersey's purchasing and procurement processes.

D. **STATEMENT OF OWNERSHIP DISCLOSURE:** Pursuant to N.J.S.A. 52:25-24.2, in the event the Bidder is a corporation, partnership or limited liability company, the Bidder must disclose their ownership. Bidder completes and submits the form along with bid proposal.

E. **NON-COLLUSION AFFIDAVIT**: Bidder completes and submits the form along with bid proposal.

F. **PREVAILING WAGE (N.J.S.A. 34:11-56.25 et seq.) AND PUBLIC WORKS CONTRACTOR REGISTRATION ACTS (N.J.S.A. 34:11-56.48 et seq.):**

1. The work described in this project is subject to the New Jersey Prevailing Wage Act, N.J.S.A. 34:11-56.25 et seq. and the Public Works Contractor Registration Act, N.J.S.A. 34:11-56.48 et seq.
2. The Public Works Contractor Registration Act requires the bidder and any subcontractors listed in the bid to be registered with the New Jersey Department of Labor and Workforce Development at the time the bid is submitted. The contractor must submit registration certificates for all listed subcontractors prior to award of the contract.
3. The Contractor must comply with the New Jersey Prevailing Wage Act, N.J.S.A. 34:11-56.25 through 56.47. Workers employed by the Contractor or any subcontractor or sub-subcontractor in the performance of services directly on the project must be paid prevailing wages. Additionally, pursuant to N.J.S.A. 34:11-56.27(a), a bidder in competitive bidding for public work, whose bid is the lowest and is 10% or more lower than the next lowest bid, must certify (form to be provided by TCNJ if applicable) to TCNJ that the bidder shall pay prevailing wage rates as required by the Act. Also, as required by N.J.S.A. 34:11-56.27 and 56.28, the contract cannot become effective until the College obtains from the New Jersey Department of Labor and Workforce Development a determination of the prevailing wage rates applicable to the project as of the contract award date and attaches a copy to the contract. As required by N.J.S.A. 34: 11-56.27, the Contractor or any subcontractor may be terminated if any covered worker is not paid prevailing wages on the project, and the Contractor and its surety shall be liable for any additional costs which result.
4. All contractors and subcontractors are required to submit certified payroll records to the College within 10 days of payday.
5. Please refer to https://www.nj.gov/labor/wageandhour/prevailing-rates/public-works/currentprevailingwage.shtml for official wage rate determinations for Mercer County, NJ.

G. **NEW JERSEY EQUAL PAY ACT:**

1. On April 24, 2018, Governor Phil Murphy signed into law New Jersey's Diane B. Allen Equal Pay Act (N.J.S.A. 34:11-56.13 et seq.) The law provides in pertinent part that as of July 1, 2018, any employer entering into a contract with the State of New Jersey or an instrumentality of the State for "qualifying services" or "public works" must provide to the Department of Labor and Workforce Development – upon commencement of the contract – wage and demographic data for all employees who are employed in connection with the contract (for public works) and for all employees (for qualifying services). This requirement DOES NOT apply to employers who are contracting with local governments (for example: municipalities and counties). The report must contain the gender, race, ethnicity, job category, compensation, and number of hours worked by each employee.
2. The extent of the Department of Labor and Workforce Development's responsibilities under the Equal Pay Act is the collection of data regarding compensation, hours worked, job/occupational category, job title, gender, race, and ethnicity for State contactors and making that data available to the Division on Civil Rights (DCR), within the Department of Law and Public Safety, and upon request to certain individuals. Complaints of unlawful discrimination

under the Equal Pay Act should be directed to the DCR, as should any questions regarding the filing of such a complaint.

3. The Department of Labor and Workforce Development requires, by the law, the Payroll Certification for Public Works Projects form to completed by employers. This form should be used to report the employee's wage and demographic data and can be found on the LWD website (https://www.nj.gov/labor/wageandhour/tools-resources/equal-pay). **Upon commencement of the contract, submit the form via the NJ Wage Hub** (njwages.nj.gov). IMPORTANT: For purposes of law, you must also submit this form to the College, either via the NJ Wage Hub or other methods.

H. N.J.S.A. 10:5-31 et seq. and N.J.A.C. 17:27-1 et seq., AFFIRMATIVE ACTION: The bidder is required to complete and submit a copy of Initial Project Workforce Report (AA-201) to the College and the New Jersey Department of Labor & Workforce Development Construction EEO Compliance Monitoring Unit verifying that the bidder is operating under a federally approved or sanctioned Affirmative Action program after notification of award, prior to signing of the contract. The bidder also agrees to submit a copy of the Monthly Project Workforce Report once a month thereafter for the duration of this contract to The College and the Department.

I. New Jersey Business Registration Certificate, N.J.S.A. 52:32-44:

1. Pursuant to - N.J.S.A. 52:32-44, The College of New Jersey ("Contracting Agency") is prohibited from entering into a contract with an entity unless the bidder/proposer/contractor, and each subcontractor that is required by law to be named in a bid/proposal/contract has a valid Business Registration Certificate on file with the Division of Revenue and Enterprise Services within the Department of the Treasury.
2. Prior to contract award or authorization, the contractor shall provide the Contracting Agency with its proof of business registration and that of any named subcontractor(s).
3. Subcontractors named in a bid or other proposal shall provide proof of business registration to the bidder, who in turn, shall provide it to the Contracting Agency prior to the time a contract, purchase order, or other contracting document is awarded or authorized.
4. During the course of contract performance:
   (a) the contractor shall not enter into a contract with a subcontractor unless the subcontractor first provides the contractor with a valid proof of business registration.
   (b) the contractor shall maintain and submit to the Contracting Agency a list of subcontractors and their addresses that may be updated from time to time.
   (c) the contractor and any subcontractor providing goods or performing services under the contract, and each of their affiliates, shall collect and remit to the Director of the Division of Taxation in the Department of the Treasury, the use tax due pursuant to the Sales and Use Tax Act, (N.J.S.A. 54:32B-1 et seq.) on all sales of tangible personal property delivered into the State. Any questions in this regard can be directed to the Division of Taxation at (609)292-6400. Form NJ-REG can be filed online at http://www.state.nj.us/treasury/revenue/busregcert.shtml.
5. Before final payment is made under the contract, the contractor shall submit to the Contracting Agency a complete and accurate list of all subcontractors used and their addresses.
6. Pursuant to N.J.S.A. 54:49-4.1, a business organization that fails to provide a copy of a business registration as required, or that provides false business registration information, shall be liable for a penalty of $25 for each day of violation, not to exceed $50,000, for each proof of business registration not properly provided under a contract with a contracting agency.

J. RECORD RETENTION: Pursuant to N.J.A.C. 17:44-2.2, the vendor shall maintain all documentation related to products, transactions or services under this contract for a period of five years from the date of final payment. Such records shall be made available to the New Jersey Office of the State Comptroller upon request.

K. ENERGY STAR ENERGY EFFICIENT PRODUCTS: Under Executive Order #11 (Corzine), the College is required to select ENERGY STAR energy-efficient products when acquiring new energy-using products or replacing existing equipment. For products that do not have ENERGY STAR labels, vendors shall follow guidelines established by the New Jersey Clean Energy Program.

L. The following list of statutes and regulations, which may be applicable in whole or in part, is provided for the benefit of the Contractor and is not meant to be all-inclusive. In the event that

other laws are applicable, it shall be the responsibility and obligation of the Contractor to ascertain and comply with them.

1. Federal Statutes:

Civil Rights Act of 1964 – 42 U.S.C.A. Section 1971 *et seq.*

The Americans with Disabilities Act of 1990

GENERAL AGREEMENT

1. Having examined the plans and specifications with related documents and the site of the proposed work and being familiar with all of the conditions surrounding the construction of the proposed project including the availability of materials and labor, the undersigned hereby proposes to furnish all labor, materials, and supplies, and to construct the project in accordance with the Contract Documents, within the time set forth therein, and at the price stated. This price covers all expenses incurred in performing the work required under the Contract Documents, of which this proposal is a part.

2. Bidder acknowledges receipt of the following Addendums/Clarifications:

   No Addenda Issued _____
   Addendum Number _____ Date _____
   Addendum Number _____ Date _____
   Addendum Number _____ Date _____

3. Bidder acknowledges and affirms that he/she has personal knowledge of or has obtained and reviewed a copy of the valid prevailing wage rates at the time of the bid and for the duration of the contract for all trades involved in the project for the geographical location of the project as issued by the Commissioner of the Department of Labor & Workforce Development, Trenton, NJ 08625 (609) 292-2259 or visiting the Department of Labor website at (https://www.nj.gov/labor/wageandhour/prevailing-rates/public-works/currentprevailingwage.shtml). All pre-determined rate increases listed at the time the contract is awarded must also be paid, beginning on the dates specified. Select Mercer for the applicable prevailing wage rates.

4. Bidder agrees that its price is good and the bid shall not be withdrawn for a period of 60 calendar days after the scheduled Bid Due Date and Time.

5. The attached bid security is to become the Property of the Owner in the event that the Contract and bond are not executed within the time set forth, as liquidated damages for the delay and additional expense (including the difference between the price provided with said bond and the next lowest responsive bidder) to the Owner caused thereby.

6. Upon conclusion of the 5-business day protest period, Bidder will execute the formal contract for the stated work and compensation on the Standard Form of Agreement Between Owner and Contractor within 5 business days and deliver as required in the General Conditions: a Performance and Payment Bond; Surety Disclosure and Certification Statement; and certificates of insurance for general liability, automobile and worker's compensation. Contractor shall provide a Maintenance Bond at job completion for a period of one year for 100% of the final contract price.

7. Bidder acknowledges work to commence on site not later than ten (10) calendar days after receipt of a Notice to Proceed.

Respectfully submitted,

(Seal if bid is by Corporation)

_____
(Signature of Principal)

_____
(Printed Name of Principal)

_____
(Title of Principal)

COST SHEET
SINGLE BID (LUMP SUM):
BASE BID, ALTERNATE PROPOSALS, AND UNIT PRICES

To: **The College of New Jersey**

for: Eickhoff Hall Hot Water Tanks Replacement

Date _____

A. BID:

1.**Base:**

Part A – Eickhoff Hall Hot Water Tanks Replacement: $_____

Part B – Allowance for Unforeseen Issues: $25,000

We, _____, the Undersigned, in accordance with the published advertisement inviting proposals, will furnish all labor, material, equipment and services necessary for the complete construction, as defined in the advertisement, specimen contract, specifications, addendums/clarifications/bulletins, drawings, and proposal, for the Contract amount indicated below for the **above noted project** in strict accordance with the Contract Documents and Addenda thereto for the total sum of:

GRAND TOTAL OF PART A AND B:

_____ **Dollars $**_____
(words)

General Construction (Single overall Prime Contract)

2. **Add /Deduct Alternate: None**

3. Check List for Bidders: A check list has been provided in these specifications for the use in completing this proposal. Bidders are encouraged to reference said list to minimize the opportunity for errors by the bidder.

B. STATEMENT:
We, the Undersigned, acting through its authorized officers and intending to be legally bound, agree that this bid proposal shall constitute an offer by the Undersigned to enter into a Contract with the acts and things therein provided and accept this offer at any time during said period by notifying the Undersigned of the acceptance of said offer.

Dated _____

Firm Name _____

Phone Number _____

Address _____

_____

**If a corporation, give the State of Incorporation, using the phrase:
"A corporation organized under the laws of _____."
If a partnership, give names of the partners, using also the phrase:
"Co-partners trading and doing business under the firm name and style of
_____.
If a Limited Liability Company, give the names of the owners/members, using also the phrase:
“A owner/member doing business under the firm name and style of _____.
If an individual using a trade name, give individual name, also using the phrase:
"An individual doing business under the firm name and style of _____.

Dated: _____

STATE OF _____
SS.
COUNTY OF _____

_____ being duly sworn say that the several matters stated in this proposal are in all respects true, and that no member of the State or employee of the College are interested in any way in this proposal.
Sworn and subscribed before me _____
Bidder signs above line
this _____ day of_____ 20____

_____ _____
Print Name and Title

SUBCONTRACTOR INFORMATION FOR SINGLE BID (LUMP SUM)

Pursuant to the State Colleges Contract Law, N.J.S.A. 18A:64-76.1, all bids submitted shall set forth the names and license numbers of all subcontractors to whom the bidder intends to subcontract the plumbing and gas fitting work; the refrigeration, the heating and ventilating systems and equipment; the electrical work, including any electrical power plants; tele-data, fire alarm, or security systems; the structural steel and ornamental iron work (individually, the "Trade" or collectively, the "Trades").

For each Trade listed below for which the work will be completed by a

- Subcontractor - you must list for each such subcontractor the name, license number (or in lieu thereof enclose a copy of the license with this form), address, and telephone number.
- Self-performed – you must list the name of the bidder (next to "Name") and license number.
- Not required - if that Trade is not required per the scope of work of the project, indicate that by inserting "Not required" (next to "Name").

Failure to complete this form as required may result in your bid being disqualified.

Plumbing and Gas Fitting Work

Must complete information for License Holder (Self-performed or Subcontractor): REQUIRED FOR THIS PROJECT

Name: _____

License Number: _____

Address: _____

_____

Telephone: _____

Refrigeration, Heating and Ventilating Systems and Equipment

Must complete information for License Holder (Self-performed or Subcontractor):

Name: _____

License Number: _____

Address: _____

_____

Telephone: _____

Electrical Work, including any Electrical Power Plants, Tele-data, Fire Alarm, or Security Systems

Must complete information for License Holder (Self-performed or Subcontractor): REQUIRED FOR THIS PROJECT

Name: _____

License Number: _____

Address: _____

_____

Telephone: _____

Structural Steel Work and Ornamental Iron Work

Must complete information if required (Self-Performed or Subcontractor):

Name: _____

Address: _____

_____

Telephone: _____

_____
Bidder Name

By: _____
Signature

_____
Printed Name of Signing Individual

_____
Date

DEMOGRAPHIC INFORMATION

Under Executive Order 34 (Corzine), the College is responsible for soliciting demographic information from its vendors. The College is required to seek the following information from each firm under contract with the College:

1. Is more than fifty percent (50%) of your company minority owned? (circle one) YES NO
   (African-American, Hispanic, Asian, and/or Native American)

2. Is more than fifty percent (50%) of your company woman owned? (circle one) YES NO

3. What is the ethnicity of the owner of your company: (check applicable according to 51% ownership)

   - ☐ Asian American
   - ☐ Multiple Ethnicities
   - ☐ Non-Minority
   - ☐ Hispanic American
   - ☐ African American
   - ☐ Caucasian American Female
   - ☐ Native American
   - ☐ Unspecified

The College is required to solicit the foregoing information. Your response, however, is **strictly voluntary**. Please be advised that any contracting decisions made by the College will **not** be influenced in any way by your decision to provide the above information.

_____
Bidder Name

By: _____
Signature

_____
Printed Name of Signing Individual

_____
Date

SMALL BUSINESS, MINORITY AND/OR WOMEN, VETERAN AND DISABLED VETERAN OWNED BUSINESS REPORTING

1. Contractor and sub-contractors are requested to check all of the following that apply to their company and, if applicable, submit a copy of their certificate(s):

A. My company is certified by the NJ Department of Treasury, Division of Revenue and Enterprise Services as a:

_____ Small Business Enterprise, SBE
_____ Minority-owned Business Enterprise, MBE
_____ Women-owned Business Enterprise, WBE
_____ Veteran-owned Business, VOB
_____ Disabled Veteran-owned Business, DVOB

B. My company is not certified by either NJ Department, but is:

_____ Small Business, SBE
_____ Minority-owned Business, MBE
_____ Women-owned Business, WBE
_____ Veteran-owned Business, VOB
_____ Disabled Veteran-owned Business, DVOB

C. _____ My company is not certified as one of the categories listed above.

_____
Bidder Name

By: _____
Signature

_____
Printed Name of Signing Individual

_____
Date

PERFORMANCE BOND & PAYMENT BOND

BOND NO._____

KNOW ALL MEN BY THESE PRESENTS, that we, the undersigned _____ _____as Principal, and_____, a corporation of the State of _____, duly authorized to do business in the State of New Jersey, having an office at _____, are hereby held and firmly bound unto The College of New Jersey in the Penal Sum of _____ DOLLARS, for payment of which well and truly to be made, we hereby jointly and severally bind ourselves, our heirs, executors, administrators, successors and assigns.

SIGNED this _____ day of _____, 20_____

THE CONDITION OF THE ABOVE OBLIGATION IS SUCH THAT, WHEREAS, the above named Principal did on the _____ day of _____, 20_____, enter into a written contract with The College of New Jersey for _____ which said contract is made a part of this bond as set forth herein;

NOW, if the said _____ shall well and faithfully do and perform the things agreed by _____ to be done and performed according to the terms of the said contract; shall pay all lawful claims of sub-contractors, materialmen, laborers, persons, forms of other suppliers or teams. fuel, oils, implements or machinery furnished, used or consumed in the carrying forward, performing, or completing of said contract, we agreeing and assenting that this undertaking shall be for the benefit of any subcontractor, materialman, laborer, person, firm or corporation having a just claim, as well as for the obligee herein; then this obligation shall be void, otherwise the same shall remain in full force and effect; it being expressly understood and agreed that the liability of the surety for any and all claims hereunder shall in no event exceed the penal amount of this obligation as herein stated.

The said surety hereby stipulated and agrees that no modifications, omissions, or additions in or to the terms of the said contract, or in or to the plans and specifications therefore shall in any wise effect the obligation of said surety on its bond.

This bond is given in compliance with the requirements of the statutes of the State of New Jersey including N.J.S.A. 18A:64-68 and any amendments thereof.

SIGNED, SEALED AND DELIVERED
IN THE PRESENCE OF

_____ BY:_____
Witness

_____ BY:_____
Witness as to Surety ATTORNEY-IN-FACT

Countersigned

this _____ day of _____, 20_____

BY:_____

NOTE: General Power of Attorney and the current financial statement of the bonding company must be attached to each copy (a total of three) of the Performance Bond.

SURETY DISCLOSURE STATEMENT AND CERTIFICATION

_____, surety(ies) on the attached bond, hereby certifies(y) the following:

(1) The surety meets the applicable capital and surplus requirements of R.S. 17:17-6 or R.S. 17:17-7 as of the surety's most current annual filing with the New Jersey Department of Insurance.

(2) The capital (where applicable) and surplus, as determined in accordance with the applicable laws of the State of New Jersey, of the surety(ies) participating in the issuance of the attached bond is (are) in the following amount(s) as of the calendar year ending December 31, ____, (insert most recent calendar year for which capital and surplus amounts are available), which amounts have been certified as indicated by certified public accountants (indicating separately for each surety that surety's capital and surplus amounts, together with the name and address of the firm of certified public accountants that shall have certified those amounts):

_____
_____
_____

(3) (a) With respect to each surety participating in the issuance of the attached bond that has received from the United States Secretary of the Treasury a certificate of authority pursuant to 31 U.S.C. 9305, the underwriting limitation established therein and the date as of which that limitation was effective is as follows (indicating for each surety that surety's underwriting limitation and the effective date thereof):

_____
_____
_____

(b) With respect to each surety participating in the issuance of the attached bond that has not received such a certificate of authority from the United States Secretary of the Treasury, the underwriting limitation of that surety as established pursuant to R.S. 17:18-9 as of date on which such limitation was so established, is as follows (indicating for each such surety that surety's underwriting limitation and the date on which that limitation was established:

_____
_____
_____

(4) The amount of the bond to which this statement and certification is attached is $_____.

(5) If, by virtue of one or more contracts of reinsurance, the amount of the bond indicated under item (4) above exceeds the total underwriting limitation of all sureties on the bond as set forth in items (3) (a) or (3) (b) above, or both, then for each such contract of reinsurance:

(a) The name and address of each such re-insurer under that contract and the amount of that re-insurer's participation in the contract is as follows:

_____
_____
_____
_____

(b) Each surety that is party to any such contract of reinsurance certifies that each reinsurer listed under item (5) (a) satisfies the credit for reinsurance requirement established under P.L. 1993, c. 243 (C. 17:51B-1 *et seq.*) and any applicable regulations in effect as of the date on which the bond to which this statement certification is attached shall have been filed with the appropriate public agency.

CERTIFICATION

(to be completed by an authorized certifying agent for each surety on the bond)

I, _____ (name of agent), as _____ (title of agent)

for _____ (name of surety),

a corporation/mutual insurance company/other (indicate type of business organization by circling one) domiciled in _____ _____ (state of domicile), DO HEREBY CERTIFY that, to the best of my knowledge, the foregoing statements made by me are true, and ACKNOWLEDGE that, if any of those statements are false, this bond is VOID and I am subject to punishment.

_____
(Signature of certifying agent)

_____
(Printed name of certifying agent)

_____
(Title of certifying agent)

_____
(Date of Certification)

TCNJ
THE COLLEGE OF NEW JERSEY

Mandatory Documents

FORM #	TITLE OF FORM
1	MANDATORY EQUAL EMPLOYMENT OPPORTUNITY LANGUAGE
2	OWNERSHIP DISCLOSURE FORM
3	NON-COLLUSION STATEMENT
4	VENDOR QUALIFICATION SHEET
5	NON-INVOLVEMENT IN PROHIBITED ACTIVITIES IN RUSSIA OR BELARUS FORM
6	DISCLOSURE OF INVESTMENT ACTIVITIES IN IRAN FORM
7	FEDERAL NON-DEBARMENT CERTIFICATION

MANDATORY EQUAL EMPLOYMENT OPPORTUNITY LANGUAGE
N.J.S.A. 10:5-31 et seq. (P.L.1975, c.127)
N.J.A.C. 17:27-1.1 et seq.
FORM # 1

The College of New Jersey
PO Box 7718
Ewing, NJ 08628-0718

CONSTRUCTION CONTRACTS

During the performance of this contract, the contractor agrees as follows:

The contractor or subcontractor, where applicable, will not discriminate against any employee or applicant for employment because of age, race, creed, color, national origin, ancestry, marital status, affectional or sexual orientation, gender identity or expression, disability, nationality or sex. Except with respect to affectional or sexual orientation and gender identity or expression, the contractor will ensure that equal employment opportunity is afforded to such applicants in recruitment and employment, and that employees are treated during employment, without regard to their age, race, creed, color, national origin, ancestry, marital status, affectional or sexual orientation, gender identity or expression, disability, nationality or sex. Such equal employment opportunity shall include, but not be limited to the following: employment, upgrading, demotion, or transfer; recruitment or recruitment advertising; layoff or termination; rates of pay or other forms of compensation; and selection for training, including apprenticeship. The contractor agrees to post in conspicuous places, available to employees and applicants for employment, notices to be provided by the Public Agency Compliance Officer setting forth provisions of this nondiscrimination clause.

The contractor or subcontractor, where applicable will, in all solicitations or advertisements for employees placed by or on behalf of the contractor, state that all qualified applicants will receive consideration for employment without regard to age, race, creed, color, national origin, ancestry, marital status, affectional or sexual orientation, gender identity or expression, disability, nationality or sex.

The contractor or subcontractor will send to each labor union, with which it has a collective bargaining agreement, a notice, to be provided by the agency contracting officer, advising the labor union or workers' representative of the contractor's commitments under this act and shall post copies of the notice in conspicuous places available to employees and applicants for employment.

The contractor or subcontractor, where applicable, agrees to comply with any regulations promulgated by the Treasurer, pursuant to N.J.S.A. 10:5-31 et seq., as amended and supplemented from time to time and the Americans with Disabilities Act.

When hiring or scheduling workers in each construction trade, the contractor or subcontractor agrees to make good faith efforts to employ minority and women workers in each construction trade consistent with the targeted employment goal prescribed by N.J.A.C. 17:27-7.2; provided, however, that the Dept. of LWD, Construction EEO Monitoring Program, may, in its discretion, exempt a contractor or subcontractor from compliance with the good faith procedures prescribed by the following provisions, A, B, and C, as long as the Dept. of LWD, Construction EEO Monitoring Program is satisfied that the contractor or subcontractor is employing workers

provided by a union which provides evidence, in accordance with standards prescribed by the Dept. of LWD, Construction EEO Monitoring Program, that its percentage of active "card carrying" members who are minority and women workers is equal to or greater than the targeted employment goal established in accordance with N.J.A.C. 17:27-7.2. The contractor or subcontractor agrees that a good faith effort shall include compliance with the following procedures:

(A) If the contractor or subcontractor has a referral agreement or arrangement with a union for a construction trade, the contractor or subcontractor shall, within three business days of the contract award, seek assurances from the union that it will cooperate with the contractor or subcontractor as it fulfills its affirmative action obligations under this contract and in accordance with the rules promulgated by the Treasurer pursuant to N.J.S.A. 10:5-31 et. seq., as supplemented and amended from time to time and the Americans with Disabilities Act. If the contractor or subcontractor is unable to obtain said assurances from the construction trade union at least five business days prior to the commencement of construction work, the contractor or subcontractor agrees to afford equal employment opportunities minority and women workers directly, consistent with this chapter. If the contractor's or subcontractor's prior experience with a construction trade union, regardless of whether the union has provided said assurances, indicates a significant possibility that the trade union will not refer sufficient minority and women workers consistent with affording equal employment opportunities as specified in this chapter, the contractor or subcontractor agrees to be prepared to provide such opportunities to minority and women workers directly, consistent with this chapter, by complying with the hiring or scheduling procedures prescribed under (B) below; and the contractor or subcontractor further agrees to take said action immediately if it determines that the union is not referring minority and women workers consistent with the equal employment opportunity goals set forth in this chapter.

(B) If good faith efforts to meet targeted employment goals have not or cannot be met for each construction trade by adhering to the procedures of (A) above, or if the contractor does not have a referral agreement or arrangement with a union for a construction trade, the contractor or subcontractor agrees to take the following actions:

(l) To notify the public agency compliance officer, the Dept. of LWD, Construction EEO Monitoring Program, and minority and women referral organizations listed by the Division pursuant to N.J.A.C. 17:27-5.3, of its workforce needs, and request referral of minority and women workers;

(2) To notify any minority and women workers who have been listed with it as awaiting available vacancies;

(3) Prior to commencement of work, to request that the local construction trade union refer minority and women workers to fill job openings, provided the contractor or subcontractor has a referral agreement or arrangement with a union for the construction trade;

(*Cont*)

(4) To leave standing requests for additional referral to minority and women workers with the local construction trade union, provided the contractor or subcontractor has a referral agreement or arrangement with a union for the construction trade, the State Training and Employment Service and other approved referral sources in the area;

(5) If it is necessary to lay off some of the workers in a given trade on the construction site, layoffs shall be conducted in compliance with the equal employment opportunity and non-discrimination standards set forth in this regulation, as well as with applicable Federal and State court decisions;

(6) To adhere to the following procedure when minority and women workers apply or are referred to the contractor or subcontractor:

(i) The contactor or subcontractor shall interview the referred minority or women worker.

(ii) If said individuals have never previously received any document or certification signifying a level of qualification lower than that required in order to perform the work of the construction trade, the contractor or subcontractor shall in good faith determine the qualifications of such individuals. The contractor or subcontractor shall hire or schedule those individuals who satisfy appropriate qualification standards in conformity with the equal employment opportunity and non-discrimination principles set forth in this chapter. However, a contractor or subcontractor shall determine that the individual at least possesses the requisite skills, and experience recognized by a union, apprentice program or a referral agency, provided the referral agency is acceptable to the Dept. of LWD, Construction EEO Monitoring Program. If necessary, the contractor or subcontractor shall hire or schedule minority and women workers who qualify as trainees pursuant to these rules. All of the requirements, however, are limited by the provisions of (C) below.

(iii) The name of any interested women or minority individual shall be maintained on a waiting list, and shall be considered for employment as described in (i) above, whenever vacancies occur. At the request of the Dept. of LWD, Construction EEO Monitoring Program, the contractor or subcontractor shall provide evidence of its good faith efforts to employ women and minorities from the list to fill vacancies.

(iv) If, for any reason, said contractor or subcontractor determines that a minority individual or a woman is not qualified or if the individual qualifies as an advanced trainee or apprentice, the contractor or subcontractor shall inform the individual in writing of the reasons for the determination, maintain a copy of the determination in its files, and send a copy to the public agency compliance officer and to the Dept. of LWD, Construction EEO Monitoring Program.

(7) To keep a complete and accurate record of all requests made for the referral of workers in any trade covered by the contract, on forms made available by the Dept. of LWD, Construction EEO Monitoring Program and submitted promptly to the Dept. of LWD, Construction EEO Monitoring Program upon request.

(*Cont*)

(C) The contractor or subcontractor agrees that nothing contained in (B) above shall preclude the contractor or subcontractor from complying with the union hiring hall or apprenticeship policies in any applicable collective bargaining agreement or union hiring hall arrangement, and, where required by custom or agreement, it shall send journeymen and trainees to the union for referral, or to the apprenticeship program for admission, pursuant to such agreement or arrangement. However, where the practices of a union or apprenticeship program will result in the exclusion of minorities and women or the failure to refer minorities and women consistent with the targeted county employment goal, the contractor or subcontractor shall consider for employment persons referred pursuant to (B) above without regard to such agreement or arrangement; provided further, however, that the contractor or subcontractor shall not be required to employ women and minority advanced trainees and trainees in numbers which result in the employment of advanced trainees and trainees as a percentage of the total workforce for the construction trade, which percentage significantly exceeds the apprentice to journey worker ratio specified in the applicable collective bargaining agreement, or in the absence of a collective bargaining agreement, exceeds the ratio established by practice in the area for said construction trade. Also, the contractor or subcontractor agrees that, in implementing the procedures of (B) above, it shall, where applicable, employ minority and women workers residing within the geographical jurisdiction of the union.

After notification of award, but prior to signing a construction contract, the contractor shall submit to the public agency compliance officer and the Dept. of LWD, Construction EEO Monitoring Program an initial project workforce report (Form AA-201) electronically provided to the public agency by the Dept. of LWD, Construction EEO Monitoring Program, through its website, for distribution to and completion by the contractor, in accordance with N.J.A.C. 17:27-7. The contractor also agrees to submit a copy of the Monthly Project Workforce Report once a month thereafter for the duration of this contract to the Dept. of LWD, Construction EEO Monitoring Program, and to the public agency compliance officer.

The contractor agrees to cooperate with the public agency in the payment of budgeted funds, as is necessary, for on-the-job and/or off-thejob programs for outreach and training of minorities and women.

(D) The contractor and its subcontractors shall furnish such reports or other documents to the Dept. of LWD, Construction EEO Monitoring Program as may be requested by the Dept. of LWD, Construction EEO Monitoring Program from time to time in order to carry out the purposes of these regulations, and public agencies shall furnish such information as may be requested by the Dept. of LWD, Construction EEO Monitoring Program for conducting a compliance investigation pursuant to N.J.A.C. 17:27-1.1 et seq.

Additional Mandatory Construction Contract Language For State Agencies, Independent Authorities, Colleges and Universities Only

The Executive Order No. 151 (Corzine, August 28, 2009) and P.L. 2009, Chapter 335 include a provision which require all state agencies, independent authorities and colleges and universities to include additional mandatory equal employment and affirmative action language in its construction contracts. It is important to note that this language is in addition to and does not re- place the mandatory contract language and good faith efforts requirements for construction con- tracts required by N.J.A.C. 17:27-3.6, 3.7 and 3.8. The additional mandatory equal employment and affirmative action language is as follows:

It is the policy of The College of New Jersey that its contracts should create a work- force that reflects the diversity of the State of New Jersey. Therefore, contractors engaged by The College of New Jersey to perform under a construction contract shall put forth a good faith effort to engage in recruitment and employment practices that further the goal of fostering equal opportunities to minorities and women.

The contractor must demonstrate to The College of New Jersey's satisfaction that a good faith effort was made to ensure that minorities and women have been afforded equal opportunity to gain employment under The College of New Jersey's contract with the contractor. Payment may be withheld from a contractor's con- tract for failure to comply with these provisions.

Evidence of a "good faith effort" includes, but is not limited to:

1. The Contractor shall recruit prospective employees through the State Job bank website, managed by the Department of Labor and Workforce Development, available online at http://NJ.gov/JobCentralNJ;
2. The Contractor shall keep specific records of its efforts, including records of all individuals interviewed and hired, including the specific numbers of minorities and women;
3. The Contractor shall actively solicit and shall provide The College of New Jersey with proof of solicitations for employment, including but not limited to advertisements in general circulation media, professional service publications and electronic media; and
4. The Contractor shall provide evidence of efforts described at 2 above to The College of New Jersey no less frequently than once every 12 months.
5. The Contractor shall comply with the requirements set forth at N.J.A.C. 17:27-1.1 et seq.

To ensure successful implementation of the Executive Order and Law, state agencies, independent authorities and colleges and universities must forward an Initial Project Workforce Report (AA 201) for any projects funded with ARRA money to the Dept. of LWD, Construction EEO Monitoring Program immediately upon notification of award but prior to execution of the contract.

IF AWARDED A CONTRACT YOUR COMPANY/FIRM WILL BE REQUIRED TO COMPLY WITH THE AFFIRMATIVE ACTION REQUIREMENTS LISTED ABOVE.

Firm Name: _____

Signature: _____

Title: _____

Date: _____

OWNERSHIP DISCLOSURE
FORM # 2

The College of New Jersey
PO Box 7718
Ewing, NJ 08628-0718

BID SOLICITATION # AND TITLE: _____

VENDOR NAME: _____

PURSUANT TO N.J.S.A. 52:25-24.2, ALL PARTIES ENTERING INTO A CONTRACT WITH THE STATE ARE REQUIRED TO PROVIDE A STATEMENT OF OWNERSHIP.

1. The vendor is a **Non-Profit Entity**; and therefore, no disclosure is necessary.
2. The vendor is a **Sole Proprietor**; and therefore, no other disclosure is necessary.
   A Sole Proprietor is a person who owns an unincorporated business by himself or her-self.
   A limited liability company with a single member is not a Sole Proprietor.
3. The vendor is a **corporation, partnership, or limited liability company;** and therefore, disclosure is necessary.
   If you answered **YES** to Question 3, you must disclose the following information below: **(a)** the names and addresses of all stockholders in the corporation who own 10% or more of its stock, of any class; **(b)** all individual partners in the partnership who own a 10% or greater interest therein; or, **(c)** all members in the limited liability company who own a 10% or greater interest therein.*

NAME		
ADDRESS		
ADDRESS		
CITY	STATE	ZIP

NAME		
ADDRESS		
ADDRESS		
CITY	STATE	ZIP

NAME		
ADDRESS		
ADDRESS		
CITY	STATE	ZIP

NAME		
ADDRESS		
ADDRESS		
CITY	STATE	ZIP

4. For each of the corporations, partnerships, or limited liability companies identified in response to Question #3 above, are there any individuals, partners, members, stockholders, corporations, partnerships, or limited liability companies owning a 10% or greater interest of those listed business entities?

   If you answered **YES** to Question 4, you must disclose the following information below: **(a)** the names and addresses of all stockholders in the corporation who own 10% or more of its stock, of any class; **(b)** all individual partners in the partnership who own a 10% or greater interest therein; or, **(c)** all members in the limited liability company who own a 10% or greater interest therein. The disclosure(s) shall be continued until the names and addresses of every non-corporate stockholder, individual partner, and/or member a 10% or greater interest has been identified.*

NAME		
ADDRESS		
ADDRESS		
CITY	STATE	ZIP

NAME		
ADDRESS		
ADDRESS		
CITY	STATE	ZIP

NAME		
ADDRESS		
ADDRESS		
CITY	STATE	ZIP

NAME		
ADDRESS		
ADDRESS		
CITY	STATE	ZIP

5. As an alternative to completing this form, a Vendor with any direct or indirect parent entity which is publicly traded, may submit the name and address of each publicly traded entity and the name and address of each person that holds a 10% or greater beneficial interest in the publicly traded entity as of the last annual filing with the federal Securities and Exchange Commission or the foreign equivalent, and, if there is any person that holds a 10% or greater beneficial interest, also shall submit links to the websites containing the last annual filings with the federal Securities and Exchange Commission or the foreign equivalent and the relevant page numbers of the filings that contain the information on each person that holds a 10% or greater beneficial interest.*

_____

_____

_____

** Attach additional sheets if necessary*

NON-COLLUSION STATEMENT
FORM # 3

The College of New Jersey
PO Box 7718
Ewing, NJ 08628-0718

Date:

_____

The College of New Jersey
The Office of Finance & Business Services, Purchasing Department
Administrative Services Building, Room 201
P.O. Box 7718
Ewing, New Jersey 08628-0718
To Whom It May Concern:

This is to certify that the undersigned bidder as not, either directly or indirectly, entered into any agreement, participated in any collusion, or otherwise taken any action in restraint of free competitive bidding in connection with the proposal submitted to The College of New Jersey on the day of , 20 .

_____ _____ _____

Signature:

_____

Corporate Seal:

Attest by:

_____

Sworn to and subscribed before me this_____day of _____, 20 ____.

My commission Expires: _____

Notary Public

THIS STATEMENT MUST BE COMPLETED AND SIGNED

VENDOR QUALIFICATION SHEET
FORM # 4

The College of New Jersey
PO Box 7718
Ewing, NJ 08628-0718

Vendors are required to submit evidence of qualifications to meet all requirements as required by the Office of Finance & Business Services at The College of New Jersey by providing the information listed below. Vendors must comply with the College's terms and conditions available on the Purchasing website.

If this information is being requested as part of an RFP or RFQ, vendors may be requested to furnish additional information for clarification purposes. This will in no way change the vendor's original proposal.

All vendors are encouraged to register with the State of New Jersey, Division of Purchase and Property via NJSTART.

TO BE COMPLETED BY VENDOR

1. Please list the types of commodities that your company can provide.

   A. _____

   B. _____

   C. _____

2. The number of years your firm has been providing these services. _____ Year(s)

3. Location of vendor's office and personnel that will be responsible for managing contract/service:

   Name: _____

   Title: _____

   Telephone Number: _____

   Email Address: _____

   Street Address: _____

   City/State/Zip: _____

   Federal Identification Number: _____

4. Does your firm have a New Jersey Business Registration Certificate? Yes ☐ No ☐
   If you would like to register, visit the State website here, the NJ BRC is required prior to award.

VENDOR QUALIFICATIONS- continued

Under NJ Executive Order 34, TCNJ is responsible for soliciting demographic, ethnic, and gender information from its vendors. Your response, however, is **strictly voluntary**. Please be advised that any contracting decisions made by TCNJ will **not** be influenced in any way by your decision to provide the above information. TCNJ is required to seek the following information from each firm under contract with us:

1. Is more than fifty percent (50%) of your company minority owned (African-American, Hispanic, Asian, and/or Native American) Yes ☐ No ☐

2. Is more than fifty percent (50%) of your company woman owned? Yes ☐ No ☐

3. What is the ethnicity of the owner of your company: (check applicable according to 51% ownership)

☐ Asian American

☐ Multiple Ethnicities

☐ Non-Minority

☐ Hispanic American

☐ African American

☐ Caucasian American Female

☐ Native American

☐ Unspecified

11. Please provide a list of former or present clients. Also, indicate the name of a contact person and telephone number for reference purposes. **Any personnel from The College of New Jersey listed as a reference will not be considered a valid reference.**

A. Client Name: _____

Contact Name: _____

Telephone Number: _____

Email Address: _____

B. Client Name: _____

Contact Name: _____

Telephone Number: _____

Email Address: _____

C. Client Name: _____

Contact Name: _____

Telephone Number: _____

Email Address: _____

VENDOR QUALIFICATIONS- continued

12. Please answer the questions below related to your prior experience If any of the responses are yes, attach a summary of details on a separate sheet.

Has the bidder:

a. been found, though either court adjudication, arbitration, mediation, or other contractually stipulated alternate dispute resolution mechanism, to have: failed to provide or perform goods or services; or failed to complete the contract in a timely manner; or otherwise performed unsatisfactorily under a prior contract with the contracting unit? Yes ☐ No ☐

b. defaulted on a contract, thereby requiring the local unit to utilize the services of another contractor to provide the goods or perform the services or to correct or complete the contract or requiring the local unit to look to the bidder's surety for completion of the contract or tender of the costs of completion? Yes ☐ No ☐

c. been debarred or suspended from contracting with any of the agencies or departments of the executive branch of the State of New Jersey at the time of contract award, whether or not the action was based on experience with the contracting unit. Yes ☐ No ☐

Firm Name: _____

Signature: _____

Title: _____

Date: _____

CERTIFICATION OF NON INVOLVEMENT IN PROHIBITED ACTIVITIES IN RUSSIA OR BELARUS
FORM # 5

TCNJ
THE COLLEGE OF NEW JERSEY

The College of New Jersey
PO Box 7718
Ewing, NJ 08628-0718

Pursuant to N.J.S.A. 52:32-60.1, et seq. (L. 2022, c. 3) any person or entity (hereinafter "Vendor[i]") that seeks to enter into or renew a contract with a State agency for the provision of goods or services, or the purchase of bonds or other obligations, must complete the certification below indicating whether or not the Vendor is identified on the Office of Foreign Assets Control (OFAC) Specially Designated Nationals and Blocked Persons list, available here: https://sanctionssearch.ofac.treas.gov/. If the Department of the Treasury finds that a Vendor has made a certification in violation of the law, it shall take any action as may be appropriate and provided by law, rule or contract, including but not limited to, imposing sanctions, seeking compliance, recovering damages, declaring the party in default and seeking debarment or suspension of the party.

I, the undersigned, certify that I have read the definition of "Vendor" below, and have reviewed the Office of Foreign Assets Control (OFAC) Specially Designated Nationals and Blocked Persons list, and having done so certify:

(Check the Appropriate Box)

☐ A. That the Vendor is not identified on the OFAC Specially Designated Nationals and Blocked Persons list on account of activity related to Russia and/or Belarus.

OR

☐ B. That I am unable to certify as to "A" above, because the Vendor is identified on the OFAC Specially Designated Nationals and Blocked Persons list on account of activity related to Russia and/or Belarus.

OR

☐ C. That I am unable to certify as to "A" above, because the Vendor is identified on the OFAC Specially Designated Nationals and Blocked Persons list. However, the Vendor is engaged in activity related to Russia and/or Belarus consistent with federal law, regulation, license or exemption. A detailed description of how the Vendor's activity related to Russia and/or Belarus is consistent with federal law is set forth below.

_____
_____
_____
_____
_____
_____

(Attach Additional Sheets If Necessary.)

Signature of Vendor's Authorized Representative	Date
Print Name and Title of Vendor's Authorized Representative	Vendor's FEIN
Vendor's Name	Vendor's Phone Number
Vendor's Address (Street Address)	Vendor's Fax Number
Vendor's Address (City/State/Zip Code)	Vendor's Email Address

[i] Vendor means: (1) A natural person, corporation, company, limited partnership, limited liability partnership, limited liability company, business association, sole proprietorship, joint venture, partnership, society, trust, or any other nongovernmental entity, organization, or group; (2) Any governmental entity or instrumentality of a government, including a multilateral development institution, as defined in Section 1701(c)(3) of the International Financial Institutions Act, 22 U.S.C. 262r(c)(3); or (3) Any parent, successor, subunit, direct or indirect subsidiary, or any entity under common ownership or control with, any entity described in paragraph (1) or (2).

DISCLOSURE OF INVESTMENT ACTIVITIES IN IRAN
FORM # 6

The College of New Jersey
PO Box 7718
Ewing, NJ 08628-0718

BID SOLICITATION # AND TITLE: _____

VENDOR NAME: _____

Pursuant to N.J.S.A. 52:32-57, et seq. (P.L. 2012, c.25 and P.L. 2021, c.4) any person or entity that submits a bid or proposal or otherwise proposes to enter into or renew a contract must certify that neither the person nor entity, nor any of its parents, subsidiaries, or affiliates, is identified on the New Jersey Department of the Treasury's Chapter 25 List as a person or entity engaged in investment activities in Iran. The Chapter 25 list is found on the Division's website at https://www.state.nj.us/treasury/purchase/pdf/Chapter25List.pdf. Vendors/Bidders must review this list prior to completing the below certification. If the Director of the Division of Purchase and Property finds a person or entity to be in violation of the law, s/he shall take action as may be appropriate and provided by law, rule or contract, including but not limited to, imposing sanctions, seeking compliance, recovering damages, declaring the party in default and seeking debarment or suspension of the party.

CHECK THE APPROPRIATE BOX

☐ I certify, pursuant to N.J.S.A. 52:32-57, et seq. (P.L. 2012, c.25 and P.L. 2021, c.4), that neither the Vendor/Bidder listed above nor any of its parents, subsidiaries, or affiliates is listed on the New Jersey Department of the Treasury's Chapter 25 List of entities determined to be engaged in prohibited activities in Iran.

OR

☐ I am unable to certify as above because the Vendor/Bidder and/or one or more of its parents, subsidiaries, or affiliates is listed on the New Jersey Department of the Treasury's Chapter 25 List. I will provide a detailed, accurate and precise description of the activities of the Vendor/Bidder, or one of its parents, subsidiaries or affiliates, has engaged in regarding investment activities in Iran by completing the information requested below.

Entity Engaged in Investment Activities _____
Relationship to Vendor/ Bidder _____
Description of Activities _____
_____
_____

Duration of Engagement _____
Anticipated Cessation Date _____

**Attach Additional Sheets If Necessary.*

CERTIFICATION

I, the undersigned, certify that I am authorized to execute this certification on behalf of the Vendor, that the foregoing information and any attachments hereto, to the best of my knowledge are true and complete. I acknowledge that the State of New Jersey is relying on the information contained herein, and that the Vendor is under a continuing obligation from the date of this certification through the completion of any contract(s) with the State to notify the State in writing of any changes to the information contained herein; that I am aware that it is a criminal offense to make a false statement or misrepresentation in this certification. If I do so, I may be subject to criminal prosecution under the law, and it will constitute a material breach of my contract(s) with the State, permitting the State to declare any contract(s) resulting from this certification void and unenforceable.

_____ _____
Signature Date

_____
Print Name and Title

FEDERAL NON-DEBARMENT CERTIFICATION
N.J.S.A. 52:32-44.1 (P.L. 2019, c.406)
FORM # 7

The College of New Jersey
PO Box 7718
Ewing, NJ 08628-0718

Summary of the Certification Requirements under N.J.S.A. 52:32-44.1

Pursuant to state law any natural person, company, firm, association, corporation, or other entity prohibited, or "debarred," from contracting with the federal government agencies, shall also be prohibited from contracting for public work in the state of New Jersey. This prohibition also extends to any affiliate organization(s) held by or subject to the control of an entity of that prohibited person or entity.

Prior to awarding a contract for public work a local unit must obtain written certification from the contracting person or entity through the form below, attesting to their non-debarment from contracting with federal government agencies. Contracting units are reminded that they must fill-in the boilerplate information in the certification sections of Parts II through IV regarding their name and type of contracting unit before using the form.

CERTIFICATION OF NON-DEBARMENT
FOR FEDERAL GOVERNMENT CONTRACTS

N.J.S.A. 52:32-44.1 (P.L. 2019, c.406)

This certification shall be completed, certified to, and submitted to the contracting unit prior to contract award, except for emergency contracts where submission is required prior to payment.

PART I: VENDOR INFORMATION	
Individual or Organization Name	
Physical Address of Individual or Organization	
Unique Entity ID (if applicable)	
CAGE/NCAGE Code (if applicable)	
Check the box that represents the type of business organization:	

☐Sole Proprietorship (skip Parts III and IV) ☐Non-Profit Corporation (skip Parts III and IV)

☐For-Profit Corporation (any type) ☐Limited Liability Company (LLC) ☐Partnership

☐Limited Partnership ☐Limited Liability Partnership (LLP)

☐Other (be specific): _____

PART II – CERTIFICATION OF NON-DEBARMENT: Individual or Organization			
I hereby certify that the **individual or organization listed above in Part I** is not debarred by the federal government from contracting with a federal agency. I further acknowledge: that I am authorized to execute this certification on behalf of the above-named organization; that The College of New Jersey is relying on the information contained herein and that I am under a continuing obligation from the date of this certification through the date of contract award by The College of New Jersey to notify The College of New Jersey in writing of any changes to the information contained herein; that I am aware that it is a criminal offense to make a false statement or misrepresentation in this certification, and if I do so, I am subject to criminal prosecution under the law and that it will constitute a material breach of my agreement(s) with The College of New Jersey, permitting The College of New Jersey to declare any contract(s) resulting from this certification void and unenforceable.			
Full Name (Print):		Title:	
Signature:		Date:	

PART III – CERTIFICATION OF NON-DEBARMENT: Individual or Entity Owning Greater than 50 Percent of Organization	
Section A (Check the Box that applies)	
☐	Below is the name and address of the stockholder in the corporation who owns more than 50 percent of its voting stock, or of the partner in the partnership who owns more than 50 percent interest therein, or of the member of the limited liability company owning more than 50 percent interest therein, as the case may be.
Name of Individual or Organization	
Physical Address	
OR	
☐	No one stockholder in the corporation owns more than 50 percent of its voting stock, or no partner in the partnership owns more than 50 percent interest therein, or no member in the limited liability company owns more than 50 percent interest therein, as the case may be.
Section B (Skip if no Business entity is listed in Section A above)	
☐	Below is the name and address of the stockholder in the corporation who owns more than 50 percent of the voting stock of the organization's parent entity, or of the partner in the partnership who owns more than 50 percent interest in the organization's parent entity, or of the member of the limited liability company owning more than 50 percent interest in organization's parent entity, as the case may be.
Stockholder/Partner/Member Owning Greater Than 50 Percent of Parent Entity	
Physical Address	
OR	
☐	No one stockholder in the parent entity corporation owns more than 50 percent of its voting stock, no partner in the parent entity partnership owns more than 50 percent interest therein, or no member in the parent entity limited liability company owns more than 50 percent interest therein, as the case may be.
Section C – Part III Certification	
I hereby certify that no individual or organization that is debarred by the federal government from contracting with a federal agency owns greater than 50 percent of the **Organization listed above in Part I** or, if applicable, owns greater than 50 percent of a parent entity of _____.	

I further acknowledge: that I am authorized to execute this certification on behalf of the above-named organization; that The College of New Jersey is relying on the information contained herein and that I am under a continuing obligation from the date of this certification through the date of contract award _____ to notify The College of New Jersey in writing of any changes to the information contained herein; that I am aware that it is a criminal offense to make a false statement or misrepresentation in this certification, and if I do so, I am subject to criminal prosecution under the law and that it will constitute a material breach of my agreement(s) with The College of New Jersey, permitting The College of New Jersey to declare any contract(s) resulting from this certification void and unenforceable.			
Full Name (Print):		Title:	
Signature:		Date:	

Part IV – CERTIFICATION OF NON-DEBARMENT: Contractor – Controlled Entities		
Section A		
☐	Below is the name and address of the corporation(s) in which the **Organization listed in Part I** owns more than 50 percent of voting stock, or of the partnership(s) in which the **Organization listed in Part I** owns more than 50 percent interest therein, or of the limited liability company or companies in which the **Organization listed above in Part I** owns more than 50 percent interest therein, as the case may be.	
Name of Business Entity		**Physical Address**
Add additional sheets if necessary		
OR		
☐	The **Organization listed above in Part I** does not own greater than 50 percent of the voting stock in any corporation and does not own greater than 50 percent interest in any partnership or any limited liability company.	
Section B (skip if no business entities are listed in Section A of Part IV)		
☐	Below are the names and addresses of any entities in which an entity listed in Part III A owns greater than 50 percent of the voting stock (corporation) or owns greater than 50 percent interest (partnership or limited liability company).	
Name of Business Entity Controlled by Entity Listed in Section A of Part IV		**Physical Address**

Add additional Sheets if necessary	
OR	
☐	No entity listed in Part III A owns greater than 50 percent of the voting stock in any corporation or owns greater than 50 percent interest in any partnership or limited liability company.

Section C – Part IV Certification

I hereby certify that the **Organization listed above in Part I** does not own greater than 50 percent of any entity that that is debarred by the federal government from contracting with a federal agency and, if applicable, does not own greater than 50 percent of any entity that in turns owns greater than 50 percent of any entity debarred by the federal government from contracting with a federal agency. I further acknowledge: that I am authorized to execute this certification on behalf of the above-named organization; that The College of New Jersey is relying on the information contained herein and that I am under a continuing obligation from the date of this certification through the date of contract award by The College of New Jersey to notify The College of New Jersey in writing of any changes to the information contained herein; that I am aware that it is a criminal offense to make a false statement or misrepresentation in this certification, and if I do so, I am subject to criminal prosecution under the law and that it will constitute a material breach of my agreement(s) with The College of New Jersey, permitting The College of New Jersey to declare any contract(s) resulting from this certification void and unenforceable.

Full Name (Print):		Title:	
Signature:		Date:	

CONTRACT FOR CONSTRUCTION

This AGREEMENT is entered into as of the ___ day of _____ , _____ , between

The College: The College of New Jersey ("TCNJ" or the "College")
PO Box 7718
2000 Pennington Road
Ewing, New Jersey 08628-0718

and

the Contractor: _____ (the "Contractor")

_____

in connection with _____

the Project: [Eickhoff Hall Hot Water Tanks Replacement] (the "Project")

The Architect: Bowman Consulting Group
451 Oakshade Road
Shamong, NJ 08088

ARTICLE 1
EMPLOYMENT OF THE CONTRACTOR/THE PROJECT DESCRIPTION

1.1 The College employs the Contractor and the Contractor agrees to perform the construction for the Project identified above. The Project is described in more detail in the College's Plans and Specifications prepared by the Architect.

ARTICLE 2
THE CONTRACT DOCUMENTS

2.1 The Contract Documents consist of this Contract for Construction and the Exhibits attached hereto ("Contract for Construction"), the General Conditions of the Contract for Construction (the "General Conditions") (and any other General, Supplementary and other Conditions), the Plans and Specifications, and also the following documents:

(a) The Contractor's Bid excluding limitations and qualifications unless such limitation or qualification is specifically accepted in writing by the College;
(c) Addenda and Clarifications issued before the bid due date;
(d) The Project Bidding Schedule; and
(e) Modifications issued after execution of this Contract for Construction.

These documents all form the "Contract," and are as fully a part of this Contract as if attached hereto or repeated herein. This Contract represents the entire and integrated agreement between the parties hereto and supersedes prior negotiations, representations or agreements, either written or oral.

ARTICLE 3
SCOPE OF WORK

3.1 The Contractor shall fully perform the Work described in the Contract Documents, except as specifically indicated in the Contract Documents to be the responsibility of others. The Contractor shall assume full responsibility for constructing and completing the Project and all the Work, including providing all labor, Subcontractors, materials, equipment, and services reasonably inferable from the Contract Documents and all applicable laws, codes and professional standards, and providing all supervision, management, and scheduling required in the General Conditions and as noted throughout the Contract Documents.

ARTICLE 4
CONTRACT TIMES

4.1 TIME OF THE ESSENCE. All dates and durations specified in this Contract, including the Construction Start Date(s), any Milestones Dates, any Substantial Completion Date(s) and any Final Completion Date(s) (collectively, "Contract Times") are agreed to be of the essence.

4.2 CONSTRUCTION START. The Work shall start no later than ten (10) calendar days after the College issues a Notice to Proceed to the Contractor ("Construction Start Date"). If the Work is to be performed in phases, the College may issue a separate Notice to Proceed with respect to each phase (e.g., Phase 1 Notice to Proceed, Phase 2 Notice to Proceed, etc.) thereby establishing different Construction Start Dates for each phase (e.g., Phase 1 Construction Start Date, Phase 2 Construction Start Date, etc.). The College may, in its sole discretion and at no cost to the College, choose to delay the issuance of a Notice to Proceed and the Construction Start Date for any phase until after the Contractor has achieved Substantial or Final Completion of any other phase.

4.3 MILESTONES. The construction tasks or activities shall be completed within the number of calendar days after the Construction Start Date as set forth in the Notice to Proceed ("Milestone Dates"). If the Work is to be performed in phases, each phase may have

separate Milestone Dates (e.g., Phase 1 Milestone Dates, Phase 2 Milestone Dates, etc.), which dates shall be set forth in the Notice to Proceed for that phase.

4.4 SUBSTANTIAL COMPLETION. The Contractor shall diligently prosecute the Work and shall achieve Substantial Completion of the entire Work as set forth in the Notice to Proceed ("Substantial Completion Date"). If the Work is to be performed in phases, each phase may have a separate Substantial Completion Date (e.g., Phase 1 Substantial Completion Date, Phase 2 Substantial Completion Date, etc.), which date shall be set forth in the Notice to Proceed for that phase. The definition and requirements of Substantial Completion are set forth in the General Conditions. The Substantial Completion Date(s) shall only be changed by a written change order.

4.5 FINAL COMPLETION. The Contractor shall achieve Final Completion of the entire Work as set forth in the Notice to Proceed ("Final Completion Date"). If the Work is to be performed in phases, each phase may have a separate Final Completion Date (e.g., Phase 1 Final Completion Date, Phase 2 Final Completion Date, etc.), which date shall be set forth in the Notice to Proceed for that phase. The requirements for Final Completion are defined in the General Conditions as well as the Specifications of the Project. The Final Completion Date(s) shall only be changed by written change order.

4.6 LIQUIDATED DAMAGES FOR DELAY. If the Contractor fails to achieve Substantial Completion of a phase of the Work or of the entire Work by the Substantial Completion Date(s) set forth in the applicable Notice to Proceed (as extended by Change Order, if applicable), and the delay is not excused by the College, then the Contractor shall pay the College the following amounts as liquidated damages for delay ("Liquidated Damages") for each calendar day that the phase of the Work or the entire Work is not substantially completed beyond the applicable Substantial Completion Date:

[$ 1/20th of 1% of the total contract price per calendar day]

The College and the Contractor agree that the actual loss to the College from construction delays and the inability to use the Project or any phase of the Project in a substantially completed state are for the most part difficult to quantify, and that the foregoing Liquidated Damages formula results in damages amounts that are a reasonable estimate of the damage to the College for not being able to use the Project in a substantially completed state and are not penalties and are not intended to be penalties. The College may deduct Liquidated Damages from payments due under this Contract, but its failure to withhold Liquidated Damages or to assert a claim for Liquidated Damages shall not be deemed a waiver of the College's right to withhold or to assert a claim for damages for any delay that occurs at any time on the Project.

ARTICLE 5
CONTRACT PRICE

5.1 CONTRACT PRICE. The Contractor shall be paid $_____ for the complete performance of this Contract, which was proposed by the Contractor in its bid and accepted by the College (the "Contract Price"). The Contractor shall be entitled to additional compensation for authorized changes which include the cost of the changes and mark-ups included in change orders approved in writing by the College in accordance with the change order provision set forth in the General Conditions.

5.2 ALTERNATES. The Contract Price is based upon and includes the following alternates, if any, which are described in the Contract Documents and are hereby accepted by the College:

[_____]

5.3 UNIT PRICES. The Contract Price is based upon and includes the following unit prices, if any, which are described in the Contract Documents:

[_____]

5.4 ALLOWANCES. The Contract Price is based upon and includes the following allowances, if any, which are described in the Contract Documents:

[_____]

ARTICLE 6
PAYMENTS TO THE CONTRACTOR

6.1 PAYMENT. The Contractor will be paid by the College in accordance with this Article and the payment provision in the General Conditions.

6.2 MONTHLY PROGRESS PAYMENTS. The College will make progress payments as the Work proceeds based on written invoices submitted monthly by the Contractor and approved by the Architect and the College. No payments will be made until the Contractor submits a unit schedule break down showing the portions of the total Contract Price for each principal category of Work and value loaded CPM schedule allocating the Contract Price among the schedule activities. Monthly progress payment amounts shall be based on the percentages of the Work completed as of the end of the pay period (less earlier payments). All payment requests or invoices and all payments shall be governed by the payment provision of the General Conditions as well as any special requirements of this Contract, including the requirement that progress payments shall be based on a unit schedule breakdown and a value loaded CPM schedule.

6.3 RETAINAGE. The College will retain 2% of the amount due on each progress payment pending Final Completion of the Work. The holding and release of retainage shall be governed by the payment provision of the General Conditions.

6.4 CHANGE ORDERS. The Contractor shall invoice for change order work in the monthly progress payment invoices as the change order work is performed, but only after a written change order and TCNJ issued Purchase Order has been signed by the College. Changes in the Work shall be governed by the change order provision of the General Conditions.

6.5 FINAL PAYMENT. Upon final completion of all Work included in the Contract Documents including all change orders, acceptance of the Work by the Architect and the College, the satisfactory completion of all of the requirements in the General Conditions for final completion, and the issuance of the Certificate of Final Completion, the Contractor will be paid the fully adjusted Contract Price including any retainage withheld (less earlier payments). The invoice for final payment and final payment shall also be subject to the payment provision of the General Conditions and any special requirements of this Contract.

6.6 PAYMENT TERMS. All invoices and payments shall also be subject to the General Conditions, including the provisions regarding payments, to the right of the College to withhold payments or to make deductions from payments, and to the Prevailing Wage Act requirements set forth in the General Conditions. The College will pay proper final invoices within thirty (30) days of their submission to the College with the approval of the Architect.

6.7 SUBMISSION OF INVOICES. Prior to the submission of the invoice, the Contractor will submit to the College and the Architect, in draft form, a "pencil copy" of the monthly invoice for review and approval setting forth each line item for which the Contractor intends to request payment in that invoice based on the claimed percent completed for that line item. Upon receipt of said "pencil copy", the College and the Architect shall observe the Work in place and, on the basis of such observations, will either approve the amounts requested or modify the Contractor's request, based on the College's independent assessment of the Work in place. The College will then return the pencil copy invoice to the Contractor for the Contractor to then adjust and submit the final invoice with the agreed to percentages completed per line item to the College for payment. No invoice shall be submitted for payment until all amounts and completion percentages have been determined in this manner.

6.8 PROMPT PAYMENT ACT. For the purposes of the State's Prompt Payment Act, N.J.S.A. 2A:30A-1, et seq.:

(a) An invoice will be deemed to have been received when it is received by the College at the address designated in the pre-construction conference for receipt of the invoices.

(b) The "billing date" as that term is used in N.J.S.A. 2A:30A-2 shall be the earlier of the date upon which an invoice for payment is approved for payment or 20 days after the invoice is received, unless within such 20 day period the invoice is found to be incomplete or

otherwise unacceptable and returned to the Contractor, with a written explanation of deficiencies, the amount withheld and the reasons for withholding payment.

(c) In the event that an invoice is found to be deficient and returned to the Contractor, the "billing date" shall be calculated from the date that a corrected invoice is received.

(d) Payment shall be considered to have been made on the date on which a check for such payment is dated.

(e) Payment terms (e.g., "net 20") offered by the Contractor shall not govern the College's obligation to make payment.

(f) The following periods of time will not be included in the calculation of the due date of the Contractor's invoice:

(i) Any time elapsed between receipt of an improper invoice and its return to the Contractor, not to exceed 20 calendar days; or

(ii) Any time elapsed between the College's return of an improper invoice to the Contractor and the College's receipt of a corrected invoice.

If the State's Prompt Payment Act is amended, or the language stated herein is inconsistent with the language contained in the State's Prompt Payment Act, the language of the State's Prompt Payment Act shall control.

6.9 LIMITATIONS ON APPLICABILITY. The provisions of this Article shall not govern the College's payment obligations nor shall they supersede or modify any other contractual provision allowing the withholding of monies from the Contractor to the extent that the Contractor has not performed in accordance with the provisions of the Contract Documents. This Article also shall not govern the College's payment obligations nor supersede or modify any other contractual provision governing the Contractor claims for additional compensation beyond the base Contract Price and approved change orders.

6.10 INTEREST. Interest shall be payable on amounts due the Contractor if not paid within thirty (30) calendar days after the billing date specified above, as provided under the State's Prompt Payment Act, N.J.S.A. 2A:30A-1, et seq. Interest on amounts due shall be payable to the Contractor for the period beginning on the day after the required payment date and ending on the date on which the check for payment is drawn. Interest may be paid by separate payment to the Contractor, but shall be paid within 30 days of payment of the principal amount of the approved invoice. Nothing in this Article shall be construed as entitling the Contractor to payment of interest on any sum withheld by the College for any reason permitted under the Contract Documents or applicable law, or on any claim for additional compensation, over and above sums due under the base Contract Price or approved change orders.

ARTICLE 7
DISPUTE RESOLUTION

7.1 If a dispute or claim arises out of or relates to this Contract, or the breach thereof, and if the dispute cannot be settled through negotiation, the method for resolution of such dispute or claim shall be as provided in the dispute resolution provision of the General Conditions.

ARTICLE 8
TERMINATION OR SUSPENSION

8.1 This Contract may be terminated by the College as provided in the termination and suspension provision in the General Conditions.

8.2 The Work may be suspended by the College or the Contractor as provided in termination and suspension provision in the General Conditions.

ARTICLE 9
INSURANCE AND BONDS

9.1 CONTRACTOR'S INSURANCE. The Contractor shall purchase and maintain insurance as set forth in the insurance and bonds provision of the General Conditions. To the extent the Contractor shall be required to purchase and maintain additional insurance or insurance that differs from that set forth in the General Conditions, such requirements are set forth below:

[_____]

9.2 SUBCONTRACTOR'S INSURANCE. The Contractor shall ensure that its Subcontractors purchase and maintain insurance as set forth in the insurance and bond provision of the General Conditions.

9.3 PAYMENT AND PERFORMANCE BOND. The Contractor shall furnish the College with a payment bond and a performance bond as set forth in the insurance and bond provision of the General Conditions.

ARTICLE 10
OTHER PROVISIONS

10.1 CONTRACTOR REPRESENTATIONS. The Contractor represents to the College that it has:

(a) **Examination of the Contract Documents.** Examined and carefully studied the Contract Documents and the other documents in the bid documents, and that they are sufficient for performing the Work at the Contract Price.

(b) **Examination of Site.** Visited the site and become familiar with and is satisfied as to the general, local and site conditions that may affect the cost, progress, and performance of the Work.

(c) **Familiarity with Law.** Familiarized itself with all federal, state, and local laws and regulations that may affect the cost, progress, and performance of the Work.

(d) **Familiarity with Other Information and Other Documents.** Carefully studied all reports of investigations and tests of the site and subsurface conditions at or contiguous to the site and all drawings of physical conditions at the site including surface or subsurface composition, water, structures and utilities at or near to the site.

(e) **Additional Information Not Required for Bidding or Contract Performance.** Does not consider that any further examinations, investigations, explorations, tests, studies, or data are necessary for the performance of the Work at the Contract Price.

10.2 ASSIGNMENT OF CONTRACT. The Contractor may not assign this Contract or any rights under or interests in this Contract including its right to payments under this Contract.

10.3 CONTRACTOR PERSONNEL ASSIGNED. The Contractor's team for this Project shall consist of the following personnel, who shall not be reassigned without the College's prior written consent:

Name	Position
_____	Project Executive
_____	Project Manager
_____	Project Superintendent
_____	Project Scheduler

The College reserves the right to request and have any member of the Contractor's or Subcontractor's staff replaced on the Project for any non-discriminatory reason.

10.4 NOTIFICATIONS/AUTHORIZED REPRESENTATIVE. All Notices required under this Contract shall be in writing, signed by the party giving same, and shall be deemed properly given only if hand delivered, sent by reputable overnight courier, or by registered or certified U.S. mail, return receipt requested, postage pre-paid and addressed as provided below.

Notice to the Contractor/Contractor's Representative. Written notices from the College and/or the Architect to the Contractor should be addressed to the Contractor's Representative:

_____

_____

_____

Attn: _____

Notice to the College/College's Representative: Written notices from the Contractor to the College should be addressed to the College's Representative:

The College of New Jersey
PO Box 7718,
Ewing, New Jersey 08628
Attn: _____

with a copy to the College's General Counsel as follows:

Michael J. Canavan
Vice President and General Counsel
The College of New Jersey
PO Box 7718
Ewing, NJ 08628-0718

The College's Contracting Officer hereby authorizes the College's Representative to receive all Contract related correspondence.

Notice to the Architect: Written notices from the Contractor to the Architect should be addressed to:

_____

_____

_____

Attn: _____

Neither the College's nor the Contractor's Authorized Representatives shall be changed without 7 days' written notice to the other party.

10.5 CONTRACT TERMS, CHANGES, AND LAW. This Contract constitutes the entire agreement between the College and the Contractor, and it shall be governed by the law of the State of New Jersey. The terms and conditions of this Contract may not be changed except by a writing signed by the Contractor and the College.

10.6 COUNTERPARTS AND SIGNATURES. This Contract may be executed in counterparts. All executed counterparts shall constitute one contract, and each counterpart shall be deemed an original. The parties hereby acknowledge and agree that facsimile signatures or signatures transmitted by electronic mail in so-called "pdf" format shall be legal and binding and shall have the same full force and effect as if an original of this Contract had been delivered. The College and the Contractor (1) intend to be bound by the signatures on any document sent by facsimile or electronic mail, (2) are aware that the other party will rely on such signatures, and (3) hereby waive any defenses to the enforcement of the terms of this Contract based on the foregoing forms of signature.

10.7 NO IMPLIED COVENANTS OR WARRANTIES. The Contractor acknowledges that there are no implied covenants or warranties from the College under this Contract.

10.8 SEVERABILITY. If any term or provision of the Contract Documents are to any extent held invalid or unenforceable, and if the provisions of the Contract Documents that are essential to each party's interests otherwise remain valid and enforceable, then (i) the remaining terms and provisions in the Contract Documents will not be affected thereby, (ii) each term and provision of the Contract Documents will be valid and enforceable to the fullest extent permitted by law, and (iii) the court/arbitrator(s) will give the offending provision the fullest meaning and effect permitted by law.

10.9 HEADINGS. The headings used in this Contract are for convenience and reference only, and are not part of this Contract, and do not in any way control, define, limit or add to the terms and conditions hereof.

10.10 INTERPRETATION/RULES OF CONSTRUCTION. The parties acknowledge that each party, and if it so chooses, its counsel, have reviewed and revised this Contract and that the normal rule of construction to the effect that any ambiguities be resolved in favor of the non-drafting party shall not be employed in the interpretation of this Contract or any amendments or exhibits thereto.

THE COLLEGE OF NEW JERSEY

By_____
William Rudeau,
Director of Design and Construction

By_____
Mark Mehler, Associate VP
for Finance & Budget Planning

Date_____

Date_____

By_____
Sharon Blanton,
Vice President for Operations

Date_____

By_____
Anup Kapur,
Executive Director of Procurement

Date_____

By_____
Maggie Greco,
Senior Director of Facilities Planning
and Construction

Date_____

CONTRACTOR:

By_____

Title_____

Date_____

GENERAL CONDITIONS
OF THE
CONTRACT FOR CONSTRUCTION

Last Revised September 2024

TABLE OF CONTENTS

Page

ARTICLE 1 CONTRACT DOCUMENTS, INTERPRETATION, INFORMATION FOR BIDDERS, CLAIMS BASED ON BID AND CONTRACT DOCUMENTS 1

1.1 Definitions 1
1.2 Intent Of Contract Documents 3
1.3 Interpretation Of Contract Documents 3
1.4 Law And Referenced Standards 3
1.5 Plans And Specifications 4
1.6 Order Of Precedence Of Contract Documents 4
1.7 Organization Of Plans And Specifications 4
1.8 Required Approvals 5
1.9 Conformity Of Work To Contract Documents 5
1.10 Work Involving Existing Structures 5
1.11 Verification Of Dimensions 5
1.12 Manufacturer Literature 5
1.13 Quality -- General Requirement 6
1.14 Examination Of Contract Documents Before Bidding/Errors 6
1.15 Site Information 6
1.16 Sufficiency Of Documents Provided For Bidding 6
1.17 Examination Of Site Before Bidding 7
1.18 Hazardous Materials On Site 7
1.19 Limitation On Claims Based On Contract Documents And Information Provided For Bidding 7

ARTICLE 2 THE COLLEGE. 8

2.1 General Rights And Responsibilities Of The College 8
2.2 The College's Representative, Authority To Decide Contract Questions 8
2.3 Required Approvals 9
2.4 Information Required From The College. 9
2.5 Permits 9
2.6 The College's Inspection Of The Project 9
2.7 The College's Inspectors, Duties And Limitations 10
2.8 The College's Rejection Of Defective Work 11

ARTICLE 3 THE ARCHITECT 11

3.1 The Architect's General Role. 11
3.2 The Architect's Access And Facilities 11
3.3 Limitation Of The Architect's Responsibilities 11
3.4 The Architect's Rejection Of Work. 12
3.5 The Architect's Review Of The Contractor's Submittals 12

TABLE OF CONTENTS
(continued)

Page

3.6 The Architect's Review Of The Contractor's As-Built Plans 12
3.7 The Architect's Determination Of Substantial and Final Completion. 12

ARTICLE 4 THE CONTRACTOR 12

4.1 The Contractor's Responsibility For Performance Of The Contract And Work 12
4.2 The Contractor's Key Personnel 13
4.3 The Contractor's Supervision Of Contract Work/The Superintendent 13
4.4 Cooperation With The College And Other Contractors 13
4.5 Performance Of The College Directives 14

ARTICLE 5 PERFORMANCE OF WORK 15

5.1 Protection Of Work/Materials 15
5.2 Safety And Safety Programs 15
5.3 Emergencies Affecting Safety 15
5.4 Working Hours 16
5.5 Site Security 16
5.6 Site Use. 16
5.7 Building Access 16
5.8 Minimize Interruption. 16
5.9 Submittals (Shop Drawings, Product Data, Samples) 17
5.10 Layout And Dimensional Control 17
5.11 Construction Access, Roads, Walks, And Parking 18
5.12 Construction Site Condition, Storage, Dust Control 18
5.13 Photographs 18
5.14 Project Sign 19
5.15 Soil Conservation. 19
5.16 Temporary Facilities, Services, Electric, Heat And Enclosures 19
5.17 Substitutions 20
5.18 License Fees 20

ARTICLE 6 SUBCONTRACTORS 20

6.1 The Contractor's Responsibility For Subcontracted Work. 20
6.2 Subcontractor Identification And Approval 21
6.3 Subcontractor Qualifications 21
6.4 Subcontractor Compliance With Contract/Subcontractor Supervisors 22
6.5 No Contractual Relationship Between The College And Subcontractors 22
6.6 Contingent Assignment of Subcontracts 22

TABLE OF CONTENTS
(continued)

Page

ARTICLE 7 TIME, LIQUIDATED DAMAGES, DELAY CLAIMS AGAINST THE COLLEGE. 23

7.1 Contract Times 23
7.2 Liquidated Damages For Delay 23
7.3 Delay Claims By The Contractor Against The College -- Limitations 23

ARTICLE 8 PROJECT SCHEDULE 24

8.1 General Project Schedule Requirements 24
8.2 Form And Content Of Project Schedule 24
8.3 Computerization Of Project Schedule. 26
8.4 Weather Inclusion In Project Schedule 26
8.5 Project Schedule Updates 26
8.6 Meetings/Eight Week Bar Charts 27
8.7 Project Schedule Documentation For Contract Payments 27
8.8 Progress and Recovery Project Schedules 28
8.9 The Contractor's Failure to Provide Project Schedule Updates 28
8.10 Scheduler Qualifications 28

ARTICLE 9 EXTENSIONS, COMPENSATION FOR CERTAIN EXTENSIONS 28

9.1 Delays Warranting Extensions Of Contract Times 28
9.2 Weather Delays 29
9.3 Float Time Use. 29
9.4 Calculation Of Extensions 29
9.5 Elimination of Delays and Extensions (Acceleration) 30
9.6 Requests For Extensions Required. 30
9.7 Compensation For Certain Extensions And Limitations 30

ARTICLE 10 PAYMENTS TO THE CONTRACTOR 31

10.1 Contract Price. 31
10.2 Monthly Progress Payments 31
10.3 Unit Schedule Breakdown/CPM Activity Price Breakdown. 32
10.4 Invoices For Monthly Progress Payments: Form and Content 32
10.5 Payment For Materials And Equipment Procured But Not Installed 33
10.6 Retainage. 34
10.7 Payment For Change Order Work. 34
10.8 Final Payment. 34
10.9 Payment Terms 34
10.10 Payment Based On Partial Acceptance (Limitation) 35
10.11 Failure To Pay Amounts In Dispute Not To Affect Performance. 35
10.12 Reasons For Withholding Payment 35

TABLE OF CONTENTS
(continued)

Page

10.13 Set-Off For State Tax Indebtedness 36
10.14 Maintenance Of Cost And Accounting Records 36
10.15 Written Evidence of Payment to Subcontractors 37

ARTICLE 11 CHANGES 37

11.1 Changes Authorized. 37
11.2 Change Request Or Directive 37
11.3 Change Orders Which Are Protested 38
11.4 Changes Affecting Contract Times 38
11.5 Contractor Initiated Change Order Requests 38
11.6 Change Order Amounts 39
11.7 Right To Audit Extra Costs (Before And After Payment) 40
11.8 Change Orders With Both Price Increases and Decreases 40
11.9 Waiver Of Rights In Connection With Change Orders Issued Without Protest. 40

ARTICLE 12 COMPLETION. 40

12.1 Substantial Completion. 40
12.2 Final Completion. 41

ARTICLE 13 SUSPENSION AND TERMINATION OF CONTRACT 42

13.1 Suspension By The College. 42
13.2 Termination For Convenience 43
13.3 Termination For Cause. 44
13.4 Surety Takeover Following Termination For Cause. 45
13.5 Suspension By The Contractor For Non-Payment. 45

ARTICLE 14 WARRANTY/DEFECTIVE WORK AND MATERIALS 46

14.1 General Work One Year Warranty; HVAC Systems Two Year Warranty 46
14.2 Defective Work, Materials And Equipment 47

ARTICLE 15 INDEMNIFICATION/LIABILITY TO THIRD PARTIES 47

15.1 The Contractor's Indemnification Obligation 47
15.2 The Subcontractor's Indemnification Obligation 49

ARTICLE 16 INSURANCE AND BONDS 49

16.1 The Contractor's Insurance. 49
16.2 The Subcontractor's Insurance. 51
16.3 Payment And Performance Bond. 51

TABLE OF CONTENTS
(continued)

Page

ARTICLE 17 DISPUTE RESOLUTION. 51

17.1 Mediation. 51
17.2 Method Of Binding Dispute Resolution. 51
17.3 Arbitration (If The College Elects To Arbitrate). 51
17.4 Consolidation Or Joinder. 52
17.5 Work During Pendency Of Dispute 52
17.6 Prompt Payment Claims 53
17.7 The Contractor's Claims: Procedures And Limitations 53
17.8 Dispute Resolution Process In The Contractor's Subcontracts 53

ARTICLE 18 MISCELLANEOUS 53

18.1 Prevailing Wage 53
18.2 Employment Discrimination 54
18.3 Patents 55
18.4 The Contractor's Compliance With Law 55
18.5 Environmental Protection – The Contractor's Duty To Comply With Applicable Law 56
18.6 No Personal Liability Of College Officials 56
18.7 Recovery Of Monies By The College From Other Contracts With The Contractor 56
18.8 Buy American Requirement 56
18.9 Compliance With Grant Requirements 57
18.10 Modification Of Contract 57
18.11 State Sales Tax Exemption. 57
18.12 Successors and Assigns. 57
18.13 Construction Liens 57
18.14 Independent Contractor Status 58
18.15 Third Party Beneficiary Rights Not Intended. 58
18.16 Gifts To College Employees And Agents Prohibited. 58
18.17 Compliance With Procurement Statutes 58
18.18 Conflict Of Interest 59
18.19 Confidential Information. 60
18.20 Publicity 60

ARTICLE 1
CONTRACT DOCUMENTS, INTERPRETATION, INFORMATION FOR BIDDERS, CLAIMS BASED ON BID AND CONTRACT DOCUMENTS

1.1 Definitions.

Terms defined in the Contract for Construction shall have the meaning provided therein. Definitions for the purpose of these General Conditions include the following:

Addendum: A document issued to bidders by the College prior to the bid due date which supplements, revises or modifies the bid solicitation documents furnished for bidding purposes, and which must be identified and included in bids for the Contract.

Architect: The Architect (A/E) engaged by the College to design the Project, to prepare the design documents and assist with bid documents, and may administer the Contract and act as the agent of the College as described in the Contract.

Bulletin: A document prepared by the Architect describing proposed changes or additions to the Work in the Contract Documents that is issued after Contract award. If the College decides to implement the change, it will provide the bulletin to the Contractor and ask it to submit a change order proposal or request (in accordance with the change order provisions in the Contract for Construction, these General Conditions and other sections of the bidding documents).

Change Order Proposal or Change Order Request: A written proposal or request submitted by the Contractor in accordance with the change order provision of the Contract for Construction, these General Conditions and other sections of the bidding documents, including proposals submitted in response to Contract Change Directives, which proposes cost, time and other terms under which the Contractor will perform changed work under the Contract. If accepted by the College, a written change order signed by the Vice President for Administration and a TCNJ Purchase Order signed by the Contracting Officer of the College, and if accepted by the Contractor in writing, it will become part of the Contract as a change order.

The College's Representative: The College's Representative is a person or persons designated by the College to act on its behalf in administering the Contract for the College. The College's Representative may include the Director of Campus Construction, the Project Manager or an independent construction manager working for the Office of Campus Construction.

College Site Superintendent: The College Site Superintendent is a person or persons designated by the College to witness, observe, record and report on activities in and around the construction site. The Site Superintendent does not have the authority to stop or change the scope of the Work of the Contract Documents.

Contract: The Contract Documents all form the Contract. The Contract represents the entire and integrated agreement between the parties hereto and supersedes prior negotiations, representations or agreements, either written or oral. The Contract may be amended or modified only by a Modification. The Contract Documents shall not be construed to create a contractual

relationship of any kind (1) between the Contractor and the Architect or the Architect's consultants, (2) between the College and a Subcontractor or a Sub-subcontractor, (3) between the College and the Architect or the Architect's consultants or (4) between any persons or entities other than the College and the Contractor. The Architect shall, however, be entitled to performance and enforcement of obligations under the Contract intended to facilitate performance of the Architect's Contractor's duties.

Contract Amendment: The Contract can only be amended by (1) a written amendment identified as such that is signed by the College and the Contractor, (2) a change order signed in accordance with the Contract Documents, (3) a written Contract Change Directive (CCD) issued by the College that should result in a change order unless issued to address some fault of the Contractor, (4) a written approval or acceptance by the College or the Architect of a change requested by the Contractor in writing, provided the request for a change is specifically identified in a submittal.

Contract Change Directive (CCD): A Contract Change Directive (CCD) is a written directive issued by the College which orders an addition, deletion, clarification of a disputed item or revision in the Work, or a response to an emergency. A CCD does not by itself change the Contract, but it should result in a change order which does change the Contract Price or Contract Times if warranted. A CCD should specify the terms of the change order (if deemed warranted by the College) which will result, and/or specify a deadline for the submission by the Contractor of a proper change order request, and/or contain other similar terms.

Contract Documents: The Contract Documents are enumerated in Article 2 of the Contract for Construction.

Contract Limit Lines: The lines shown on the Plans that limit the boundaries of the Project site, and beyond which no construction work or activities shall be performed by the Contractor unless otherwise specified in the Contract Documents, including the Plans and Specifications and supplemental General Conditions.

Contracting Officer: The Associate Treasurer of the College shall be the Contracting Officer in connection with the Contract and the Project. The Contracting Officer and other designee shall have authority to act on behalf of the College under the Contract.

Field Order (FO): A written order issued by the Architect or the College which requires minor changes in the Work that do not result in a change in the Contract Price or the Contract Times. If the Contractor believes that a field order warrants the issuance of a change order that changes the Contract Times or Contract Price, it must notify the College and the Architect in writing within 48 hours, and its notice must specify the terms of the change order that it believes are warranted, including specific time and price change requests.

Plans: The Plans are the graphic and pictorial portions of the Contract Documents showing the design, location and dimensions of the Work, generally including plans, elevations, sections, details, and diagrams.

Project: The Project is the total construction of the Work performed under the Contract Documents and may include construction by the College and by separate contractors that the College has specifically identified.

Specifications: The Specifications are that portion of the Contract Documents consisting of the written requirements for materials, equipment, systems, standards and workmanship for the Work, and performance of related services prepared by the Architect or the College.

Supplemental General Conditions: The part of the Contract Documents which amends or supplements these General Conditions for the Project.

Work: The construction and services required by the Contract Documents, whether completed or partially completed, and includes all other labor, materials, equipment and services provided or to be provided by the Contractor to fulfill the Contractor's obligations. The Work may constitute the whole or a part of the Project.

1.2 Intent Of Contract Documents.

The intent of the Contract Documents is to describe a functionally complete and aesthetically acceptable Project to be constructed and completed by the Contractor in every detail in accordance with the Contract Documents. Any Work, services, materials, equipment or documentation that may be reasonably inferred from the Contract Documents or from prevailing custom or trade usage as being required to produce a complete Project shall be supplied by the Contractor whether or not specifically identified at no additional cost to the College. Where the Contract Documents describe portions of the Work in general terms but not in complete detail, only the best construction practices and only materials and workmanship of the first quality are to be used. Only where the Contract Documents specifically describe a portion of the Project as being performed by others is the Work to be considered to include less than the entire Project.

1.3 Interpretation Of Contract Documents.

When two or more interpretations of a Specification for the Work are possible, the most stringent or the highest cost interpretation shall apply as determined by the Architect. The Architect (or in the absence of the Architect, the College) shall be the sole interpreter of the Plans and Specifications and the Contractor's performance therewith. It is the intent of these Plans and Specifications to provide materials of a quality consistent with the highest standards provided under similar circumstances in the same general geographical area and that will result in long- term use and efficient operation.

1.4 Law And Referenced Standards.

The Contractor is required to comply with all federal, state and local laws and regulations that apply to the Project, the Work and the Contract. Where the Contract Documents refer to any publication, including but not limited to any standard, which affects any portion of the Work or the Project, it shall be considered to mean the edition or revision in effect on the bid due date unless otherwise specified in the Contract Documents. No provision in any publication including

any standard shall create an obligation on the part of the College or the Architect to supervise or direct the Contractor's Work.

1.5 Plans And Specifications.

The Plans will include general plans and such details as deemed necessary to give a comprehensive representation of the construction required. The Contractor shall keep one set of Plans available at the Project site, which shall be available for inspection by the College and the Architect at all times. All alterations affecting the requirements in the Plans must be authorized by the College and the Architect in writing, and shall be promptly noted on the Contractor's record set of Plans, which are maintained at the site for inspection by the Contractor, the College and the Architect.

1.6 Order Of Precedence Of Contract Documents.

Each of the Contract Documents is an essential part of the Contract, and a requirement specified in one part of the documents is binding as if specified in all. The Contract Documents are intended to be complementary and to describe and provide for a complete Project. The obligations of the Contractor under the various Contract Documents shall be cumulative and to the extent that one of the Contract Documents imposes a stricter or more costly requirement or higher standard upon the Contractor than does another Contract Document, the more stringent or more costly requirement or higher standard, as determined by the Architect, shall apply. Otherwise, if there is any conflict among the Contract Documents, the signed Contract for Construction and all approved change orders shall control. As to the other Contract Documents, the order of precedence shall be as follows:

(a) Contract for Construction
(b) Addenda
(c) Supplemental General Conditions
(d) General Conditions
(e) Specifications
(f) Plans
    i. Notes
    ii. Large Scale Details
    iii. Sections
    iv. Elevations
(g) Scope of Work Description

1.7 Organization Of Plans And Specifications.

The arrangement of the Plans and the organization of the Specifications into divisions, sections or articles shall not be construed by the Contractor as being intended to divide or allocate the Work among Subcontractors or trades or to establish the scope of the Work to be performed by particular Subcontractors or trades. The College is not liable for the Contractor dividing and separating the Contract Documents into individual packages to Subcontractors. Items that the Contractor fails to include or provide for shall be at the Contractor's sole risk and

cost. The Contract Documents work together as a whole and, therefore, the Contractor is required to coordinate the entire package with all its Subcontractors.

1.8 Required Approvals.

In all cases where approvals or decisions under the Contract Documents are required from the College, the Work shall not proceed without the required approvals and decisions in writing.

1.9 Conformity Of Work To Contract Documents.

All Work performed shall conform to the lines, grades, cross-sections, dimensions, material requirements, tolerances, details and other information in the Contract Documents. The purpose of tolerances is to accommodate occasional minor variations from the middle portion of the tolerance range that are unavoidable despite reasonable construction practices. When a maximum or minimum tolerance value is specified, the material and the Work shall be controlled so that they shall not be preponderantly of borderline quality or dimension.

1.10 Work Involving Existing Structures.

On projects involving alterations, remodeling, repairs, installations or other work in pre-existing structures or systems, the Contractor shall by personal inspection of the existing structures and systems satisfy itself as to the accuracy of any information provided that may affect the quantity, size and/or quality of materials required for a satisfactorily completed Project, including information that is not identified or included in the Plans and Specifications. The Contractor shall provide all material and labor required to complete the Work based on conditions that can be reasonably observed by a competent and diligent contractor before bidding.

1.11 Verification Of Dimensions.

The Contractor shall verify all dimensions at the job site and shall take any and all measurements necessary to verify the information in the Plans. The Contractor shall properly and accurately layout and survey the Work. Any errors or discrepancies affecting the layout of the Work shall be reported to the Architect and the College immediately in writing. No Work affected by any error or discrepancy shall proceed until such discrepancy is resolved by a written decision of the Architect with the consent of the College.

1.12 Manufacturer Literature.

Manufactured articles, materials and equipment shall be installed, applied, connected, erected, used, cleaned and conditioned in accordance with the manufacturer's written instructions unless otherwise specified in the Contract Documents. If there is any conflict between manufacturer literature and the Contract Documents, it shall be reported by the Contractor to the Architect and the College in writing, and the Contractor shall not proceed without a written decision by the Architect with the consent of the College.

1.13 Quality -- General Requirement.

Where no explicit quality or standard are specified for Work, materials or equipment, they shall be new, of good quality, free of defects, suitable for their intended use, in conformity with the Contract Documents, and consistent with the highest quality of the surrounding Work and of the construction of the Project generally.

1.14 Examination Of Contract Documents Before Bidding/Errors.

The Contractor represents and warrants that before bidding it examined and carefully studied the Contract Documents and other documents included or referred to in the bid documents. The Contractor also represents and warrants that the documents are sufficient for bidding and performing the Work at the Contract Price. Should it appear that any of the Work or materials are not sufficiently or properly detailed or explained in the Contract Documents, the Contractor shall notify the College in writing before the bid deadline for submitting questions.

Errors, omissions, conflicts, discrepancies, inconsistencies or other defects in the Contract Documents or between the Contract Documents and any codes, standards or other applicable documents which are capable of being discovered by a diligent and competent contractor before bidding shall be reported to the College in writing before the bid deadline for submitting questions. If errors, omissions, inconsistencies or other defects in the Contract Documents are not discovered until after the bid due date, the Contractor shall promptly notify the College and the Architect of them in writing, provide written recommendations regarding changes or corrections to resolve any such errors, omissions, inconsistencies or defects, and obtain the Architect's written interpretation and approval with the consent of the College before proceeding with the Work affected.

1.15 Site Information.

Soil borings, test pits or other subsurface or site information regarding the physical site and subsurface conditions on or near the site may have been obtained from independent contractors for the purpose of preparing the design documents for the Project rather than for the purpose of contractor estimating or bidding. Such information may be identified or included in the Contract Documents so that it can be reviewed by bidders during the bidding phase, but because of the limited nature and purpose of the information, it shall not be considered to be part of the Contract Documents, and the Contractor must assume responsibility for interpreting and relying upon the information.

1.16 Sufficiency Of Documents Provided For Bidding.

The Contractor represents and warrants that before bidding it carefully studied all reports, surveys and documents included or identified in the bid documents regarding observations, inspections, investigations and tests of the site and subsurface conditions at or near the site, and all information provided to bidders regarding physical conditions at or near the site, including surface and subsurface composition, water, structures and utilities, and that it determined that no further examinations, investigations, tests, studies or data were necessary for bidding or the performance of the Work at the Contract Price. If the Contractor concluded that additional

information is required, it must notify the College in writing before the bid deadline for submitting questions.

1.17 Examination Of Site Before Bidding.

The Contractor represents and warrants that before bidding it familiarized itself with the site and was satisfied as to the general, local and site conditions which may affect the cost, progress and performance of the Work and the Contract, and that its bid and bid price take into account all such conditions. No additional costs will be borne by the College for conditions that existed and were reasonably observable or described at the time of bidding.

1.18 Hazardous Materials On Site.

The Contractor will not be responsible for hazardous environmental conditions uncovered or discovered on the site that were not disclosed in the Contract Documents and that were not caused by the Contractor or anyone working through or under the Contractor. If such conditions are discovered, the Contractor shall stop work and notify the College in writing immediately. The College may issue a written directive to the Contractor requiring it to stop work until the hazardous environmental condition is remedied, and the Contractor will be entitled to an extension of the Contract Times if an extension is warranted under the provisions of the Contract for Construction and these General Conditions regarding extensions. The College may also make changes in the Contract in response to the conditions, and the Contract will be changed in accordance with the change order provisions in the Contract for Construction and these General Conditions.

1.19 Limitation On Claims Based On Contract Documents And Information Provided For Bidding.

The Contractor may not assert claims for extra compensation beyond the bid and Contract Price for constructing the completed Project by reason of any errors, omissions, inconsistencies, or defects in the Contract Documents that are discoverable by a diligent and competent contractor, because of (i) its obligation to review and study the bid documents before submitting its bid, (ii) its representation in the Contract Documents that it did so, and (iii) its obligation to notify the College in writing of any such errors, omissions, inconsistencies, or defects before submitting its bid,. In addition, the Contractor may not assert claims for extra compensation beyond the bid and Contract Price for constructing the completed Project by reason of any lack of information affecting the construction of the Project at the time of bidding, or errors in the information included or referenced in the bid documents except to the extent explicitly permitted by the Contract for Construction or these General Conditions. The Contractor shall notify the College in writing before submitting its bid of any errors or omissions in the information provided or be precluded from seeking extra compensation or asserting a claim. This limitation on claims may be modified and further restricted in the signed Contract for Construction when the Contract Documents explicitly require the Contractor to participate in any aspect of the design phase.

The Contractor may assert claims for extensions and additional compensation in accordance with the provisions of the Contract for Construction and these General Conditions if

information regarding the site that is identified in the bid or Contract Documents is factually inaccurate, and the inaccuracy is one that a reasonably competent and diligent contractor would not discover in preparing a bid. The Contractor may not assert a claim for an extension or extra compensation when it claims, not that the information is factually inaccurate, but rather that conclusions, inferences or judgments made in reliance on accurate information prove to be incorrect.

ARTICLE 2
THE COLLEGE

2.1 General Rights And Responsibilities Of The College.

The College as the owner of the Project is entitled to have the Contractor perform and complete the Work in accordance with the Contract Documents, including the time of completion, quality and documentation requirements of the Contract. The College for its part undertakes to furnish the site, to notify the Contractor of any restrictions on the site that could affect the Contractor's performance of the Contract, to obtain approvals relating to the site that are needed for the construction to proceed, to pay the Contractor in accordance with the Contract, and to act reasonably in reviewing all documentation, claims and questions properly submitted to it under the Contract. The College also undertakes to provide the information and items that it expressly agrees in the Contract Documents to provide.

The College shall also have such other rights and responsibilities as are specified in the Contract Documents. The College will not supervise the Contractor's Work or be responsible for the Contractor's construction means and methods, or the Contractor's safety practices, or any failure of the Contractor to comply with the Contract Documents or any laws or regulations.

2.2 The College's Representative, Authority To Decide Contract Questions.

The Contracting Officer delegates its authority to the College's Representative who is authorized to act and make decisions on behalf of the College regarding matters specified in the Contract Documents. However, the College's Representative is not authorized to make or agree to material changes to the Contract Documents or changes involving the Contract Times or Contract Price.

All changes to the Contract Documents including change orders that modify Contract Price, Contract Times or other material change to the Contract Documents must be reviewed and approved by the Contracting Officer or his/her designee. The Contracting Officer designates that the Vice President for Administration is authorized to approve change orders.

The College's Representative, in consultation with the Architect, is authorized to decide on behalf of the College, all questions regarding the quality, acceptability and rate of progress of the Work, all questions regarding the interpretation of the Contract Documents, the acceptability of the performance of the Contract by the Contractor, and the compensation due to the Contractor. Where the College's Representative is authorized to render decisions under the

Contract for Construction or these General Conditions regarding disputes or claims, he/she shall consult with the Architect and shall not act arbitrarily so as to unfairly benefit either the College or the Contractor.

2.3 Required Approvals.

In all cases where approvals or decisions are required from the College under the Contract Documents, such approvals or decisions shall be made reasonably, except in cases where a specific standard applies such as, for example, situations where the College is entitled to exercise unqualified discretion in selecting the types of materials, products or construction which it decides to procure.

2.4 Information Required From The College.

Information which the Contract Documents specify the College will provide shall be provided with reasonable promptness.

2.5 Permits.

The College will arrange and pay for permits and permit inspections, including building code permits except to the extent that the Specifications specify otherwise. The Contractor will arrange for and coordinate all inspections and the dates and times for all inspections with local, state and independent agencies and include the College's Representative or the Site Superintendent.

2.6 The College's Inspection Of The Project.

The College shall have the right to be represented at the site by the College's Representative(s), the Site Superintendent and other College employees designated by the College, the Architect, and other consultants designated by the College or the Architect. The College and its representatives shall have the right to visit the site, inspect Work and materials, inspect Project documentation, conduct tests, attend meetings, meet with the Contractor' and the Subcontractors' representatives, investigate problems, conduct studies, and make reports. The College and its representatives shall be allowed access to all parts of the Work, and the Contractor shall furnish them with information and assistance when they request it.

The Contractor shall give the College and the Architect timely notice of readiness of Work for observation, inspection and testing, and shall cooperate with these efforts. The Contractor shall also comply with any inspection and testing procedures specified in the Contract Documents.

The Contracting Officer, the Architect and the College's Representative shall have the right to direct the Contractor to remove or uncover unfinished Work if deemed necessary to inspect Work or materials in place.

If Work is covered before it is inspected because the College, the Architect or any consultant were not afforded reasonable notice and an opportunity to inspect, or where the

Contract Documents or any law require an inspection, the Contractor shall uncover and replace Work at its own expense if required to do so by the College.

If any other portion of the Work not specifically required to be inspected is covered, and the College or the Architect did not ask to observe or inspect the Work before it was covered, the College may nonetheless ask to inspect the Work. If the College makes such a request, the Contractor shall uncover the Work for inspection. If the Work uncovered is found to be in accordance with the Contract Documents, the cost of uncovering and replacement shall be paid by the College by a change order. If the Work uncovered is found not be to in compliance with the Contract Documents, the Contractor shall pay all costs of uncovering and replacement, and also remedy the defect or deficiency at its own cost.

The College at all times retains the right to stop all or part of the Work by a written direction because of defective Work until the defect is eliminated. This right shall not give rise to any duty on the part of the College to exercise the right for the benefit of the Contractor or those performing its Contract.

The College at all times retains the right to stop all or part of the Work due to concerns with the effectiveness of the Contractor's safety program required under Article 5.2. The College may require the Contractor to provide a written plan to correct safety deficiencies, an on-site safety supervisor, or other administrative or engineering controls to ensure the safety of personnel impacted or potentially impacted by Contractor operations. The Contractor shall indemnify, defend and hold the College harmless from fines issued by Federal, State or Local OSHA enforcement.

2.7 The College's Inspectors, Duties And Limitations

If the College designates inspectors to inspect Work and materials and Project documentation, they will not be authorized to alter or waive any requirements or provisions in the Contract Documents. The College's inspectors will not be authorized to issue instructions contrary to the Contract Documents or to act as foremen or employees of the Contractor. The College's inspectors have the authority to reject unsuitable Work or materials, subject to written confirmation by the College's Representative. If the Contractor believes that any action of a College inspector is contrary to the Contract Documents, it shall notify the College's Representative and the Architect in writing within 48 hours. The College does not undertake to have inspectors sufficient in number to inspect every item of Work or material as it is provided, or to have inspectors with the expertise needed to judge every aspect of the Work.

The Contractor shall remain responsible for defective Work or materials irrespective of any inspections or lack of inspections during the Work. If the Contractor seeks a binding determination of the acceptability of Work or materials during the performance of the Contract, it shall do so by making a written request for such a determination to the College's Representative with a copy to the Architect.

2.8 The College's Rejection Of Defective Work.

The College shall have the right to reject defective Work, materials, or equipment at any time, and to require the Contractor to remove and replace it at the Contractor's expense. The Contractor shall also be responsible for repairing damage to other work caused by defects or deficiencies in its Work. The College's Representative, upon consultation with the Architect, may elect to accept Work or materials that do not conform to the Contract Documents and to credit or reduce the Contract Price, but the College shall have no contractual obligation to elect this remedy. Changes to the Contract Documents in these circumstances shall be recorded as a change order under the change order provision of the Contract for Construction and these General Conditions.

ARTICLE 3
THE ARCHITECT

3.1 The Architect's General Role.

The Architect is, by contract with the College, responsible for the design of the Project. During construction, the Architect is responsible for reviewing the Contractor's submittals to determine if they conform to the Contract Documents and good industry practice, to provide some level of inspection to determine if Work and materials provided by the Contractor conform to the Contract Documents and good industry practice, and to review the Contractor's payment applications. During the performance of the Work, the Architect may investigate any defects and deficiencies in the Work or materials provided and make recommendations to the College regarding the defects or deficiencies. The Architect will conduct inspections to determine if the Contractor has achieved proper Substantial and Final Completion and submitted all documents required at Substantial and Final Completion. The Contractor shall cooperate with and render assistance to the Architect in the performance of these duties.

3.2 The Architect's Access And Facilities.

The Contractor shall allow the Architect and its consultants access to the Project at all times and shall facilitate their access to inspect Work and materials and Project documentation. The Architect and its consultants shall be permitted to attend job meetings, scheduling meetings and other meetings at the site and the Contractor shall facilitate their ability to do so. The Contractor shall provide an office at the site for the Architect if the Specifications require it to do so.

3.3 Limitation Of The Architect's Responsibilities.

The Architect will not be responsible for or have control of construction means and methods or safety precautions and programs in connection with the Work. The Architect will not be responsible for or have control of acts or omissions of the Contractor, its Subcontractors, or any of their agents or employees, or any other person performing any of the Contract Work.

3.4 The Architect's Rejection Of Work.

The Architect may recommend rejection of Work or materials that it believes does not conform to the Contract Documents. Whenever the Architect considers it necessary or advisable, it may recommend to the College special inspections or testing of Work or materials, including completed Work and materials.

3.5 The Architect's Review Of The Contractor's Submittals.

The Architect will review, approve or take other appropriate action regarding the Contractor's submittals, such as shop drawings, product data and samples, to assure that they conform with the design requirements and Contract Documents. The approval of a specific item shall not be deemed to constitute approval of an assembly of which the item is a component.

3.6 The Architect's Review Of The Contractor's As-Built Plans.

The Architect will periodically review the Contractor's as-built plans maintained at the site to ensure that they are up-to-date, and shall review the completed as-built plans at Project completion to ensure that they are complete and are provided to the College.

3.7 The Architect's Determination Of Substantial and Final Completion.

The Architect will conduct inspections to determine the dates of Substantial and Final Completion and to determine if the Contractor has properly Substantially and Finally completed the Project. The Architect will obtain from the Contractor all written warranties and all other documents that the Contractor is required to provide at Substantial and Final Completion of the Project.

ARTICLE 4
THE CONTRACTOR

4.1 The Contractor's Responsibility For Performance Of The Contract And Work.

The Contractor is the person or entity identified as such in the Contract. The Contractor shall be lawfully licensed in the jurisdiction where the Project is located.

The Contractor shall perform all of the duties in the Contract Documents, shall furnish the labor, materials and equipment to complete the construction of the Project in accordance with the Contract Documents, and furnish all services, labor, materials and equipment necessary or appropriate to construct the Project. The Contractor shall manage, supervise, schedule, direct, and inspect the Work as competently, skillfully, and efficiently as possible, and shall be solely responsible for all construction means, methods, techniques, safety, security, sequences, procedures, and coordination.

The Contractor shall comply with all applicable laws, and shall establish and maintain reasonable quality assurance and safety programs in connection with its Work. The Contractor shall complete the Work in compliance with the Contract Documents and by Milestone, Substantial Completion and Final Completion Dates in the Contract for Construction or any authorized extensions thereof. The Contractor shall maintain good order and discipline at the site at all times.

4.2 The Contractor's Key Personnel.

The Contractor shall assign to the Project a Project executive, Project manager, superintendent, and scheduler, and such other key personnel as are specified in the Contract for Construction or as required to carry out the requirements of the Project. The Contractor shall not remove or replace such key personnel without the College's written approval. The College has the authority to reject key personnel assigned to the Project and have replaced any staff member of the Contractor or any of the Subcontractors for any non-discriminatory reason, including, but not limited to, safety violations, poor past performances, drug use, or inappropriate behavior.

4.3 The Contractor's Supervision Of Contract Work/The Superintendent.

The Contractor shall supervise and be responsible for the acts and omissions of the Contractor's employees, agents, Subcontractors, sub-subcontractors, suppliers and other persons performing portions of the Work and the Contract. The Contractor's designated Project superintendent shall be at the Project site at all times when Work is in progress. The Contractor may designate in writing an alternate superintendent who must be approved in writing by the College. The superintendent (or alternate) shall have full authority to represent and act for the Contractor at the site and shall have full authority to execute orders and directives of the College without delay.

Communications from the College or the Architect to the superintendent shall be deemed to have been given to the Contractor. The superintendent shall be capable of and authorized to respond to all hazardous and unsafe conditions at the Project site and to implement prompt corrective measures to eliminate all unsanitary, hazardous or dangerous conditions at the site. The College may suspend all or part of the Work at the Project site if the superintendent (or alternate) is not present at the Project site. Such a suspension shall not be the basis of a claim against the College, including without limitation any claim for additional time or extra cost.

The superintendent shall attend all meetings at the Project site including job meetings, scheduling meetings, and meetings with the College and/or the Architect. The superintendent shall have a written plan that must be approved in writing by the College for responding to emergencies when the Work is not in progress. The Contractor shall also utilize qualified competent craftsmen on the Project.

4.4 Cooperation With The College And Other Contractors.

The College reserves the right to contract for and perform other or additional work on or adjacent to the Project site. When separate contracts are let within the limits of the Project site, or in areas adjacent to the site, the Contractor shall perform its Work so as not to interfere with or

hinder the progress or completion of the work being performed by other contractors. The Contractor shall also affirmatively cooperate with such other contractors and coordinate its activities with theirs, and include coordination measures in the Project Schedule. The Contractor shall arrange its Work and shall place and dispose of materials being used so as not to interfere with the operation of other contractors within the limits of the Project site. The Contractor shall join its Work with that of the other contractors in an acceptable manner and shall perform its Work in proper sequence with that of other contractors.

If there is a disagreement as to the respective rights of the Contractor and others doing work within the limits of or adjacent to the Project site, the College shall determine the respective rights of the contractors involved to secure the satisfactory completion of all affected work. The Contractor shall not be entitled to additional compensation beyond its Contract Price that may arise because of inconvenience, delay, or loss experienced by it as a result of the presence and operations of other contractors working within the limits of or adjacent to the Project site.

The College reserves the right to occupy any portion of the Project that is ready for occupancy prior to Final Completion and acceptance of the Project, after Local and State Construction Enforcing Agency approval.

The occupancy of any portion of the Project does not constitute an acceptance of any Work nor does it waive the College's right to liquidated damages or constitute an acceptance of any Work, as the Project will be accepted as a whole and not in units. Prior to such occupancy, however, the Architect, a representative of the College, and the Contractor shall fully inspect the portions of the Project to be occupied, preparing a complete list of omissions of materials, faulty workmanship, or any items to be repaired, torn out or replaced. The College will assume responsibility for damage to premises so occupied of any items not on this list when such damage is due to greater than normal wear and tear, but does not assume responsibility for improper or defective workmanship or materials.

4.5 Performance Of The College Directives.

When the College issues a written directive to the Contractor under the authority of any provision in the Contract for Construction or these General Conditions, the Contractor shall perform as directed in a diligent manner and without delay. Compliance with written directives shall not adversely affect the rights of the Contractor under the Contract for Construction, these General Conditions or law, but if the Contractor objects to a directive of the College, or claims that a directive infringes upon its rights or entitles it to a change order, it shall notify the College in writing within 2 business days of any directive and describe any objection it has to the directive and the reasons for its objection. Objection to a written directive does not relieve the Contractor of the obligation to comply with the directive and proceed in a diligent manner to implement the directive without delay.

ARTICLE 5
PERFORMANCE OF WORK

5.1 Protection Of Work/Materials.

The Contractor, shall at its own expense, protect all finished Work and materials from damage and keep them protected until the Project is accepted as Substantially Completed, and shall repair or replace any Work or material damaged before acceptance. After the Project is accepted as Substantially Complete, the Contractor will remain responsible up through Final Completion for damage to Work and materials caused by it or its Subcontractors or others participating in the performance of its obligations under the Contract Documents. The Contractor shall also secure and protect its own tools, equipment, materials and supplies, and the College shall have no liability for damage, theft or injury to the Contractor's property.

5.2 Safety And Safety Programs.

The Contractor shall have full responsibility for safety at the Project site at all times up to Final Completion and acceptance of the Project and the Contract. The Contractor shall provide for the safety of all individuals on the Project site, and take measures to ensure that individuals on or near the Project site are not injured by the performance of the Contract. The Contractor shall establish and maintain a Project safety program in accordance with all applicable laws including OSHA, good industry practice, and any additional requirements in the Contract Documents. If the College or the Architect become aware of an unsafe situation, the Contractor will immediately respond to remedy the safety concern and shall take all other actions necessary to comply with Article 2.6.

5.3 Emergencies Affecting Safety.

If there is an emergency affecting the safety of persons or property, the Contractor shall take immediate action to prevent damage, injury or loss. The Contractor shall notify the College in writing of the situation and all actions being taken immediately or as soon as possible. If, in the opinion of the Contractor, immediate action is not required, the Contractor shall notify the College in writing of the emergency situation and proceed in accordance with the College's instructions. However, if loss, damage, injury or death occurs that could have been prevented by the Contractor's prompt and immediate action, the Contractor shall be liable for all costs, damages, claims, actions, suits, attorney's fees and other expenses that result.

Any additional compensation or extension of time claims by the Contractor on account of emergency Work shall be determined in accordance with the change provisions of the Contract for Construction and these General Conditions. The Contractor shall be responsible for emergencies and costs and delays resulting therefrom that could have been foreseen or prevented with normal diligence, planning, and supervision of the Work, or that are caused by the Contractor's failure to properly perform the Contract.

The Contractor shall provide the College with a list of the names and telephone numbers of its employees and employees of each Subcontractor designated to be contacted in case of an emergency during non-working hours. A copy of this list shall be displayed prominently at the

Project site so that it is visible when the Project site is secured and shall be provided to the College's campus police department.

5.4 Working Hours.

Except as required for the safety or protection of persons or property, or as specified in the Contract Documents, all Work at the site shall be performed during regular working hours, and not on Saturdays, Sundays, legal holidays, the College's commencement days, resident move-in and move-out days or other days specifically noted in the Contract Documents without the prior written consent of the College, which will not be unreasonably withheld.

5.5 Site Security.

The Contractor shall provide, maintain and oversee security at the site if required in the Specifications. The Project site shall be fenced as specified in the Specifications, and the Contractor shall control access when gates are unlocked or open. The fence shall provide a physical barrier to the site and protection from visible nuisance. At a minimum, the fence shall be firmly secured with buried posts or weighted feet, top rails, metal fabric, and locking gates. Contractor shall immediately notify the College in the event of unauthorized entry to the site.

5.6 Site Use.

The Contractor shall confine construction equipment, storage and Work to the Project site absent written approval from the College. Any request by the Contractor to use areas outside the Project site must be described in written form and included with the Contractor's bid.

5.7 Building Access.

The Contractor shall be responsible for the sign out, distribution, safe use and return of all building keys and/or access cards, and shall be responsible for all costs associated with failure to return these items (e.g., the cost to re-key/re-implement the system).

5.8 Minimize Interruption.

The Contractor acknowledges that the College is an existing educational facility and that classes may be in session during construction. The Contractor agrees to conduct its Work with as little disruption as reasonably possible to the College's students, faculty, employees and guests, and will maintain a safe environment for the College's students, faculty, employees and guests, in addition to the Contractor's employees and workers of all tiers. The Contractor and its Subcontractors and employees of all tiers must display courtesy and consideration with and shall refrain from discriminating against or harassing the College's students, faculty, employees, visitors and guests at all times. The Contractor will not allow smoking, vaping, alcohol, drugs, any firearms, or other weapons on the College's property at any time. The Contractor shall abide by all campus traffic regulations.

5.9 Submittals (Shop Drawings, Product Data, Samples).

Prior to the beginning of Work on the Project, the Contractor shall furnish to the Architect and the College for their review and approval, a schedule setting forth all the submittals, including shop drawings, product data and samples required by the Contract Documents, that the Contractor intends to submit to the Architect for review and approval, the date upon which the Contractor shall make each such submittal and the date upon which the Architect shall complete its review of each such submittal, which in no event shall be less than ten (10) days from receipt ("Submittal Schedule"). The Architect and the College shall identify all submittals that will require more than ten (10) days to review and notify the Contractor of the required review period. The Contractor shall adjust the Submittal Schedule to accommodate the extended review period. The Architect shall endeavor to conduct its review and approval of all submittals in accordance with the Submittal Schedule. In the event that a submittal is made that is not set forth on the Submittal Schedule, the Architect shall review and return such submittal within ten (10) working days from receipt.

Submittals shall be complete as to quantities, details, dimensions and design criteria. The Architect will approve and the College will review submittals if they conform to the Contract Documents, the design concept and good industry practice. The Contractor shall note its approval of all submittals and the date for any submittals prepared by any Subcontractor or supplier, and it shall be responsible for determining and verifying all materials, field dimensions, field construction criteria, and coordination requirements pertaining to the submittal.

The Contractor will not be relieved of responsibility of deviations in submittals from the requirements in the Contract Documents by reason of approvals of the submittals unless the Contractor specifically identifies the deviation in the submittal and the Architect and the College expressly approve the deviation in writing. The Contractor shall be responsible for errors or omission in its submittals. No Work or materials included in a submittal shall begin until the submittal is approved by the Architect and the College.

5.10 Layout And Dimensional Control.

The Contractor shall be responsible for locating and laying out the Project components and all of the Project parts on the Project site in strict accordance with the Plans, and shall accurately establish and maintain dimensional control. The Contractor shall employ a competent and licensed New Jersey engineer or land surveyor as appropriate to perform all layout Work and to fix the level and location of excavations, footing base plates, columns, walls, floors and roof lines. The Contractor shall furnish to the College and the Architect certifications that each such level is as required by the Plans as the Work progresses.

The plumb lines of vertical surfaces shall be tested and certified by the Contractor's engineer or surveyor as the Work proceeds. The engineer or surveyor shall establish all points, lines, elevations, grades and bench marks for the proper control and execution of the Work. The engineer or surveyor shall establish a single permanent benchmark to be approved by the Architect, to which all three coordinates of dimensional control can and shall be based. The engineer or surveyor shall verify all topographical and utility survey data, and all points, lines, elevations, grades and benchmarks furnished by the College.

Should any discrepancies be found between information in the Plans and the actual site or field conditions, the Contractor shall notify the Architect and the College in writing, and shall not proceed with any Work affected until it receives written instructions from the College.

The Contractor is required to provide a final "as built" survey from a New Jersey licensed/certified surveyor of the Project site showing all structures, elevations, grades and required information on the Project site and submit to the College in CADD format.

5.11 Construction Access, Roads, Walks, And Parking.

The Contractor shall keep all roadways, drives, walkways and parking areas within or near the site free and clear of debris, gravel, mud or any other site materials, including, for example, the cleaning of muddy wheels and undercarriages on vehicles before they exit the site. The Contractor shall be responsible for any citations, fines, or penalties imposed on it or the College for failing to comply with applicable local rules or laws regarding its use of roads and the like.

The Contractor shall obtain permission in writing from the College before using for construction purposes any existing driveways, parking areas, walkways or areas not specifically designated for such use in the Contract Documents. The Contractor shall maintain such driveways and areas in good and clean condition during construction and not damage them. At Final Completion, the Contractor shall leave them in the same condition as they were at the start of the Work. Conditions of such facilities before use shall be photographed and otherwise documented by the Contractor. The Contractor shall not commence construction of permanent driveways, parking areas or walks on the Project site without the written approval of the College.

Any existing walkways, driveways, aprons, or curbs damaged by the Work of the Contract Documents shall be replaced in kind, at the Contractor's expense, immediately upon Project completion, or as required to maintain campus safety and campus aesthetics.

5.12 Construction Site Condition, Storage, Dust Control.

The Contractor shall provide reasonable, safe and orderly storage for its equipment, tools and materials, and shall not unreasonably encumber the site. The Contractor shall keep the site and the Project free from the accumulation of refuse, debris and scrap materials caused by its operations so that the site has a neat, orderly and workman-like appearance. Loading, cartage, hauling and dumping will be at the Contractor's expense. The Contractor shall provide, at its expense, temporary dust-proof partitions around areas of work in existing buildings, and where reasonably required, in new building areas.

5.13 Photographs.

The Contractor shall provide, at its expense, monthly progress photographs of the Project. The photographs shall be 8 inches by 10 inches and shall be submitted to the College in duplicate monthly. Unless otherwise specified in the supplemental general requirements, four photographs

shall be submitted each month which provide views of the Project taken from the same four points each, which points shall be selected by the Architect.

5.14 Project Sign.

The Contractor shall, at its expense, provide, erect and maintain two Project signs at the site, which shall be described in the Contract Documents. The College will specify the location of the signs. The signs shall be painted by a professional sign painter or prepared by a professional graphic artist. No other signage will be permitted at the site. The signs shall include the name and cell phone number of a Contractor-designated project lead that is available for 24-hour contact in case of emergency. The Contractor shall remove the signs when the Project is finally accepted unless the College requests that they be removed earlier.

5.15 Soil Conservation.

The Contractor shall employ reasonable measures to conserve the soil at the site, and determine and comply with all soil conservation measures required by the Mercer County Soil Conservation District.

The Contractor shall coordinate and schedule all soil conservation inspections, shall provide the College with written notice of all such inspections so that the College may attend the inspections if it chooses in its sole discretion to do so, and shall provide the College with all site inspection notes, approvals or notices.

5.16 Temporary Facilities, Services, Electric, Heat And Enclosures.

The Contractor shall provide storage areas, temporary drives and sidewalks, employee parking areas, staging areas, excavation borrow/spoil areas, commercial canteen areas, field offices including a meeting room, telephones, toilet facilities, and other temporary facilities that are necessary to perform the Work or that may be required by the Project Specifications. The Contractor shall locate these facilities on the Project site, and the location shall be subject to the approval of the College.

The Contractor shall provide adequate and clean temporary toilet facilities on the Project site in locations to be approved by the College, and they shall be serviced at least twice a week by a firm qualified and experienced in such functions. The Contractor shall provide such temporary electricity, water, and other utilities that are necessary to perform the Work, or that may be required by the Project Specifications. The Contractor shall also supply such temporary enclosures and heat that are necessary to perform the Work or that may be required by the Project Specifications. The Contractor and the Subcontractors will not enter or use any College facilities not required by the Work of the Contract.

Temporary electric and heat shall be furnished by the Contractor for the benefit of other contractors working on the Project if specified in the Project Specifications.

The Contractor shall not anticipate using the permanent heating or air conditioning system in a building for temporary heat or air conditioning prior to the acceptance of the Project as Substantially Complete unless specified otherwise.

Any natural gas, combustible material, or hazardous material containers utilized by the Contractor must be stored in a safe, ventilated location approved by the College. The Contractor must also submit for approval a reasonable safety plan for the operation of temporary heat equipment. The Contractor shall be solely responsible for any natural gas, combustible material or hazardous materials containers utilized by the Contractor or any of its Subcontractors and shall indemnify, defend and hold harmless the College from any fines, costs, expenses, liabilities, damages, etc. resulting from the Contractor's or any of its Subcontractors' use of such materials.

5.17 Substitutions.

To the extent that the Contractor includes in its bid substitute materials or equipment or construction methods in lieu of those specified in the Contract Documents, it does so at its own risk. Any substitution must be equal in type, function and quality to the item required in the Contract. The Contractor must submit all information required within 20 days of the Contract award to determine if the proposed substitute is equal to the requirements of the Contract Documents, and any substitution must be approved in writing by the Architect and the College.

No substitution shall result in any increase in the Contract Price or Contract Times. The Contractor in its application for the substitution must certify in writing that the substitution is equal to what is specified in the Contract Documents in all material respects and will not increase the Contract Times or Contract Price of the Work. The College shall have sole discretion to determine whether a proposed substitution is equal to what is specified in the Contract Documents.

Should the substitution be rejected, the Contractor will then be required to provide the specified product, material or method at no additional cost to the College and no change in the Project Schedule.

5.18 License Fees.

The Contractor shall be responsible for obtaining the right to use any equipment, design, device or material required to perform the Contract, and shall include in its Contract Price any license fee or royalty required.

ARTICLE 6
SUBCONTRACTORS

6.1 The Contractor's Responsibility For Subcontracted Work.

The Contractor shall be fully responsible to the College for the proper performance of the Contract irrespective of whether the Work is performed by the Contractor's own forces or by Subcontractors employed by the Contractor. The Contractor shall be responsible for the acts and

omissions of its Subcontractors and suppliers on the Project and shall take appropriate measures if they are not properly supervising or performing their Work.

6.2 Subcontractor Identification And Approval.

The Contractor shall have included with its bid for the Contract, the names, addresses and license numbers of all Subcontractors that it proposes to utilize on the Project for plumbing and gas fitting work, HVAC work, electrical work, structural steel and ornamental iron work. No Subcontractor may perform Work on the Project until it has been approved in writing by the College.

Within 20 days after issuance of the Notice to Proceed, the Contractor shall furnish to the Architect and the College in writing for review by the Architect and the College a list of the names of all Subcontractors, sub-subcontractors, fabricators, manufacturers, sources of supply, articles, devices, fixtures, pieces of equipment, materials and processes proposed for each item of Work using AIA Document G705-2001, List of Subcontractors. The Architect and the College will notify the Contractor in writing if either the College or the Architect, after due investigation, has reasonable objection to any names on such list.

In submitting the names of Subcontractors, the Contractor shall (1) list the name and address of the Subcontractor, (2) provide the name and address of all sub-subcontractors for each significant subdivision of the trade or work, and (3) reference in the form of a list at least 3 jobs similar in size and quality to the Project performed by the subcontractor in the last 5 years, with name and location of work, dollar value and names of the College and the Architect.

In submitting sources of supply, articles, devices, fixtures, piece of equipment and materials, including those under subcontracts and sub-subcontracts, the Contractor shall list (1) the name and address of the source of supply, and (2) the name of the manufacturer of the items.

If the College disapproves of a proposed Subcontractor, it will provide the reason for its decision in writing. The College will not be liable for any extra cost or delays caused by the reasonable disapproval of proposed Subcontractors. The approval of Subcontractors by the College shall not relieve the Contractor of the responsibility for complying with all of the provisions of the Contract Documents including those performed by the Subcontractors. Subcontractors approved by the College may not be changed without prior notice to and written approval by the College.

Payment to the Contractor shall not be made until the list of Subcontractors (as required above) has been provided to the Architect and College.

6.3 Subcontractor Qualifications.

The College may disapprove of a proposed Subcontractor if (i) it has a reasonable objection to the Subcontractor, (ii) there is evidence of poor performance on other Projects or financial problems, (iii) the Subcontractor has been suspended or debarred by any public agency within the State of New Jersey, (iv) the Subcontractor is not properly licensed and registered to do business in New Jersey or with the New Jersey Department of Labor regarding prevailing

wages, or (v) the Subcontractor has been charged with or convicted of violating any laws, including but not limited to, the New Jersey Prevailing Wage Act, criminal laws, public procurement laws, anti-trust laws, election laws, laws against employment discrimination, environmental laws, tax laws, professional licensing laws, or laws regarding attempts to improperly influence the College or other public officials.

Subcontractors shall utilize qualified, competent craftsmen on the Project.

6.4 Subcontractor Compliance With Contract/Subcontractor Supervisors.

The Contractor shall require its Subcontractors on the Project to comply with all pertinent terms of the Contract Documents, and shall include all appropriate terms and provisions in written subcontracts on the Project to achieve proper Contract performance. Each Subcontractor shall have competent superintendents and foremen supervising their work, and the Contractor shall take appropriate measures if they fail to do so.

6.5 No Contractual Relationship Between The College And Subcontractors.

The Contractor shall enter into written subcontracts with each and every Subcontractor and supplier solely in its own name. No approval by the College of any Subcontractor or supplier and nothing in the Contract Documents shall create any contractual relationship or duties between the Contractor's Subcontractors and the College. Nothing in the Contract Documents shall cause any of the Contractor's Subcontractors or suppliers to be deemed a third- party beneficiary of the Contract between the College and the Contractor, and nothing herein shall give any of the Contractor's Subcontractors or suppliers any rights or claims directly against the College.

6.6 Contingent Assignment of Subcontracts.

Each subcontract agreement for a portion of the Work and any purchase order for materials or equipment may, in the College's sole discretion, be assigned by the Contractor to the College, provided that

(a) assignment is effective only after termination of the Contract by the College for cause or for convenience and only for those subcontract agreements that the College accepts by notifying the Subcontractor and the Contractor in writing and only on such terms and conditions acceptable to the College;

(b) assignment is subject to the prior rights of the surety, if any, obligated under bond relating to the Contract;

(c) if the College elects to take an assignment of any subcontract or purchase order, the Contractor shall execute all papers necessary to effectuate the assignment; and

(d) the assignment shall not relieve the Contractor of its existing obligations to any Subcontractor or Supplier, nor shall it cause the College to assume

any of the Contractor's obligations to any Subcontractor or Supplier that arose prior to the termination.

When the College accepts the assignment of a subcontract agreement or purchase order, the College assumes the Contractor's rights and obligations under the subcontract going forward. Upon such assignment to the College, the College may further assign the subcontract to a successor contractor or other entity.

ARTICLE 7
TIME, LIQUIDATED DAMAGES, DELAY CLAIMS AGAINST THE COLLEGE.

7.1 Contract Times.

The Contractor shall begin the Work within 10 days after the issuance of a Notice to Proceed by the College, and shall perform the Work in the Contract Documents by the dates specified in the Notice to Proceed, including Construction Start, Milestone, Substantial Completion and Final Completion Dates (collectively, "Contract Times"). As specified in the Contract for Construction, if the Work is to be performed in phases, the College may issue separate Notices to Proceed for each phase, which shall specify the Construction Start, Milestone, Substantial Completion and Final Completion Dates for that phase. The College may, in its sole discretion and at no cost to the College, choose to delay the issuance of a Notice to Proceed and the Construction Start Date for any phase until after the Contractor has achieved Substantial or Final Completion of any other phase.

7.2 Liquidated Damages For Delay.

If the Contractor fails to Substantially Complete any phase of the Work or the entire Work by the Substantial Completion Date(s) set forth in the applicable Notice to Proceed (as extended by Change Order, if applicable), and the delay is not excused by the College, then the Contractor shall pay the College the amounts specified in the Contract for Construction as liquidated damages for delay for each calendar day that the phase of the Work or the entire Work is not Substantially Completed beyond the applicable Substantial Completion Date

7.3 Delay Claims By The Contractor Against The College -- Limitations.

The Contractor may not assert claims against the College for extra compensation by reason of any delays in its Work resulting from acts or omissions of any third parties irrespective of extensions granted under the Contract, including but not limited to delays caused by third parties such as the Architect, other contractors, utilities and governmental authorities.

The College shall only be required to pay additional compensation for delays caused by the College itself and

shall not be liable for any period of delay when there is a concurrent delay for which the College is not responsible.

When the Contractor is entitled to extra compensation for delay under the Contract for Construction and these General Conditions, it can only assert claims for extra costs at the job site, and may not assert claims for extra costs for home office expenses, home office overhead, lost profit or revenue, or consequential losses as that term is defined by New Jersey law. Any additional compensation under this Article shall also be subject to the provisions in the Contract for Construction and these General Conditions regarding claims, and the provisions in the Contract for Construction and these General Conditions regarding the maintenance and availability of cost records.

ARTICLE 8
PROJECT SCHEDULE

8.1 General Project Schedule Requirements.

The Contractor shall schedule the construction Work and determine the most feasible means and order for the Work to complete the Project within the times required by the Contract. The Contractor shall prepare a Project Schedule and monthly schedule updates, which must be approved in writing by the College and the Architect. The Contractor shall perform the Contract and the Work in accordance with the Project Schedule. The Project Schedule should include a schedule of submittals for approval as required herein. The Project Schedule must be submitted before any Work (other than mobilization to site and general layout and site preparatory work) on the Project can begin under the Notice to Proceed. When the Contractor's Project Schedule is approved in writing by the College, it shall become an additional Contract Document and the Contractor shall be required by the Contract to comply with it. The Project Schedule and any updates to it shall be used in determining the amount of the monthly progress payments to the Contractor. The College may also use the Project Schedule and updates to determine if the Contractor is adequately planning and performing the Work in accordance with the Contract Documents.

8.2 Form And Content Of Project Schedule.

The Contractor shall prepare the Project Schedule using Critical Path Method (CPM) scheduling techniques. The Contractor shall utilize the latest revision of Primavera P3 or Microsoft Scheduling software. The Contractor shall prepare a detailed schedule which shows how it will plan, organize, execute and complete the Work. The Project Schedule shall be in the form of an activity oriented network diagram (CPM). The principles and definitions used in this Article shall be as set forth in the Associated General Contractors of America (AGC) publication "Construction Planning and Scheduling", copyright 1994.

The detailed network diagram shall provide sufficient detail and clarity of form and technique so that the Contractor can plan, schedule and control the Work properly, and the College and the Architect can readily monitor and follow the progress of all portions of the

Work. The network diagram shall comply with the limitations imposed by the scope of the Work and contractually specified Milestone, Substantial Completion, and Final Completion Dates. The Project Schedule shall include the arrow or network diagram and the computer produced schedule with dates. The Project Schedule shall include and reflect the following factors:

(a) Project phasing, contract Milestone, Substantial and Final Completion Dates.
(b) The structural breakdown of the Project.
(c) The types of Work to be performed and the labor trades involved.
(d) Reasonable logic and activity durations.
(e) Reasonable coordination of all activities.
(f) Purchase, manufacture and delivery activities for all major materials and equipment.
(g) Deliveries of equipment furnished by the College.
(h) Allowances for work by separate contractors identified in writing by the College at the time of Contract award.
(i) Submittals and approvals of shop drawings, material samples, and other required submittals.
(j) Subcontract Work.
(k) Crew flows and sizes (manpower).
(l) Assignment of responsibility for performing all activities.
(m) Access and availability to Work areas.
(n) Identification of interfaces and dependencies with preceding, concurrent and follow-on contractors, and sequences and interdependence of activities.
(o) Testing and inspections.
(p) Phased or total inspection, acceptance, and takeover by the College.
(q) Utilization of the Project Schedule to determine amounts of monthly progress payments.
(r) Activities required of the College and the Architect such as approvals, including reasonable durations for the activities.

Activities should be set forth in working days and have a maximum duration of 60 days, except for non-construction activities such as the procurement and delivery of materials and equipment. All durations shall be the result of definitive manpower and resource planning by the Contractor. The level of detail in the Project Schedule shall be subject to the approval of the College. The Project Schedule shall include a reasonable approach to achieve Milestone, Substantial Completion and Final Completion Dates in the Contract. Any failure of the Contractor to include any element of the Work in the Project Schedule shall not excuse the Contractor from completing that Work and all of the Work needed to complete the Project by the Milestone, Substantial Completion and Final Completion Dates in the Contract.

The network diagram is to be prepared by a computer plotter. The logic diagram will be pure logic and shall not be drawn to time scale. The logic diagram shall be drawn on 30" x 42" size sheets and prepared on a tracing/mylar or similar material suitable for reproducing high quality prints.

8.3 Computerization Of Project Schedule.

The mathematical analysis of the detailed network diagram shall be made by computer, and the tabulation for each activity shall include the following:

(a) Activity numbers.
(b) Activity descriptions.
(c) Durations in work days for each activity.
(d) Earliest start date (by calendar date).
(e) Earliest finish date (by calendar date).
(f) Latest start date (by calendar date).
(g) Latest finish date (by calendar date).
(h) Slack or total float in work days.

The following computer documents shall be prepared as part of the initial Project Schedule submission and each update:

(a) Activity file sort, including sorts listing activities required of the College and the Architect, such as approvals.
(b) Eight week "lookahead" detailed bar chart.
(c) Eight week summary bar chart.
(d) Additional computer sorts requested by the College.
(e) High density CDs or thumb drives of all computer files.

8.4 Weather Inclusion In Project Schedule.

Seasonal weather conditions shall be included in the Project Schedule, including average precipitation, temperature and other weather conditions typical in the geographic area over a 5 year period by month.

8.5 Project Schedule Updates.

The Contractor shall prepare Project Schedule updates monthly until the Project is completed. The first update shall be issued 30 calendar days after the Construction Start Date specified in the Notice to Proceed. Updates shall include the following information:

(a) Actual start and completion dates for activities.
(b) Activity percent completion.
(c) Remaining durations for activities in progress.

Each Project Schedule update shall also include a narrative report that includes the following information:

(a) Summary of Work completed during update period.
(b) Comparison of actual progress and status to activities and dates in original Project Schedule.

(c) Analysis of critical path including effect of activity progress on the Project critical path.
(d) Analysis of secondary critical paths, meaning float within 10 days of the Project critical path.
(e) Analysis of time lost or gained during the update period.
(f) Identification of problem areas.
(g) Identification of change orders and delays impacting or delaying the Project under the Project Schedule.
(h) Solutions or proposed solutions to current problems and delays.
(i) Extensions requested by the Contractor, including activities affected and the amounts, and the reasons for the requests.
(j) Extensions granted by the College for delays and changes, including the activities affected and the amounts, and any effect on the critical path and Contract Milestone, Substantial Completion and Final Completion Dates.
(k) Delays in activities required of the College and the Architect, and activities that they are required to complete in the update period following the issuance of the update.

All Project Schedule updates must be submitted to the College and the Architect for written approval. Project Schedule updates, including the reports which are approved by the College, shall be deemed to be official records of the progress and status of the Project under the Project Schedule and the Contract, and may be utilized by the College in determining if the Contractor is adequately planning and performing the Work under the Contract Documents.

8.6 Meetings/Eight Week Bar Charts.

The Contractor's Project Manager and Scheduler shall arrange for and attend monthly progress and scheduling meetings with the College and the Architect. Monthly progress meetings shall be scheduled 3 to 7 days after monthly Project Schedule updates and reports are issued and provided to the College and the Architect. The purpose of these meetings will be to review past progress, current status, problem areas, delays, measures to reduce delays, future progress, and the Contractor's most recent Project Schedule update and report. At the monthly progress meetings, the Contractor shall provide a look ahead summary and detailed bar charts showing the Work and activities to be performed and/or completed during the 8-week period following the Project Schedule update.

8.7 Project Schedule Documentation For Contract Payments.

The Contractor will not be entitled to payments under the Contract until a Project Schedule has been submitted to and approved in writing by the College. No payment will be made under the Contract if, when the payment is due, a Project Schedule update and narrative report is due under this Article but has not been submitted to and approved in writing by the College. The original Project Schedule shall include a breakdown allocating the total Contract Price among the network activities in the Project Schedule, which must be approved by the College.

8.8 Progress and Recovery Project Schedules.

The Contractor shall perform its Work in accordance with the Project Schedule. If the Contractor's Work falls behind the requirements of the Project Schedule, it shall, at its own cost, institute measures to improve its progress and bring its Work in compliance with the Project Schedule, including but not limited to increasing manpower, increasing work hours per shift, increasing shifts, increasing working days per week, and rescheduling Work activities to perform them concurrently where feasible.

If monthly Project Schedule updates show that the Contractor's progress has fallen behind the Project Schedule so as to jeopardize the achievement of Milestone, Substantial Completion or Final Completion Dates by more than 10 work days, the Contractor shall, if requested by the College in writing, prepare a recovery schedule with acceleration measures to regain the lost time, and shall proceed in accordance with the recovery schedule in addition to the Project Schedule at its own cost.

8.9 The Contractor's Failure to Provide Project Schedule Updates.

If the Contractor fails to provide monthly Project Schedule updates and reports when required, the College can elect in its sole discretion to employ any of the following remedies: (i) not make progress payments; (ii) on 10 days written notice to the Contractor, retain its own consultant to provide Project Schedule updates and reports and deduct the cost from the Contract Price; (iii) terminate the Contract for default in accordance with the termination provisions in the Contract for Construction and these General Conditions and/or (iv) make a claim on the performance bond.

8.10 Scheduler Qualifications.

The Contractor must utilize a Project Scheduler that satisfies the qualification requirements for the Project. If at any time during the Project it appears that the Contractor's Project Scheduler is not competent to provide the scheduling services required in this Article, the Contractor shall, within 10 days after a written notice and demand from the College, retain a replacement scheduler that is competent to provide the services required. The College may also utilize any of the remedies provided in the Contract for Construction or these General Conditions for the Contractor's failure to provide proper Project Schedule updates and reports.

ARTICLE 9
EXTENSIONS, COMPENSATION FOR CERTAIN EXTENSIONS.

9.1 Delays Warranting Extensions Of Contract Times.

If the Contractor is unavoidably prevented from completing any part of the Work within the Milestone, Substantial Completion or Final Completion Dates by causes beyond the control and without the fault of the Contractor or its Subcontractors, those Contract Times will be extended by amounts equal to the time lost due to such delays, provided the Contractor requests extensions in accordance with this Article. Delays warranting extensions of the Contract Times

include unforeseeable and unavoidable delays caused by the College, the Architect, other contractors employed by the College, utility owners or other third parties, acts of God, acts of governmental authorities, wars, abnormally severe weather conditions of unusual duration (specifically excluding weather conditions of the type and duration that have been encountered in the area in which the Project is located) that prevent timely delivery of materials or equipment necessary to the completion of portions of the Work or hamper access to the Work by workmen or Subcontractors, fires, floods, earthquakes, epidemics, plagues, and other unavoidable casualties.

Except for the conditions described in Article 7.3, apart from an extension of time, no payment or allowance of any kind shall be made to the Contractor as compensation for damages on account of hindrance or delay from any cause in the progress of the Work, whether such delay be avoidable or unavoidable. The Contractor agrees that it will make no claim for compensation, damages for any such delays, and will accept in full satisfaction for such delays said extension of time.

9.2 Weather Delays.

The Project Schedule shall take into account normally anticipatable adverse weather plus an additional five (5) days of severe and unusual weather conditions that will materially interfere with the timely prosecution of the Work. No time extensions will be granted for time lost due to weather conditions that do not meet the criteria set forth in Article 9.1, and then only to the extent more than five (5) days of delay result from such severe and unusual weather conditions. Owner shall not be required to keep a record of days of precipitation or low temperatures and the burden of proof with respect to weather delays shall be upon Contractor. No time extensions will be considered for any weather conditions that do not affect Work on the critical path or Contract Times.

9.3 Float Time Use.

Float time in the Project Schedule is not for the exclusive use of either the Contractor or the College. Float time is available for use by both parties to facilitate the effective use of available resources and to minimize the impact of problems and delays that may arise during construction. No time extension will be granted as a result of any problem, change order or delay which only results in the loss of available positive float on the Project Schedule. Float time shown on the Project Schedule shall not be used by the Contractor in a manner that is detrimental to the interests of the College or the Project.

9.4 Calculation Of Extensions.

Extensions will be calculated based on the effect of delays on the Project Schedule and the activities in the Project Schedule. If the Contractor is entitled to an extension for a delay based on the nature of the delay under this Article, the activities in the Project Schedule affected by the delay will be extended by the amount they are affected. If extensions of activities in the Project Schedule affect the critical path and delay the Contract Milestone, Substantial Completion or Final Completion Dates, they too will be extended to the extent affected. The critical path and Contract Times will only be extended to the extent that they are actually

affected under the Project Schedule by a delay for which the Contractor is entitled to an extension.

If, for any scheduled activity or period, there are concurrent delays that include delays for which the Contractor is entitled to an extension and delays for which the Contractor is not entitled to an extension, the Contractor will be given an extension for the delays for which it is entitled to extension so that it will not be liable to pay liquidated damages for delay, unless the College eliminates or reduces that delay. A concurrent delay will not justify an extension to the Contractor if it has minimal effect on the completion of the Project, and/or if it would likely have been avoided if it had become apparent that it was having an effect on the progress of the Project and the Final Completion Date.

9.5 Elimination of Delays and Extensions (Acceleration).

If the effect of a delay for which the Contractor is entitled to an extension can be reduced or eliminated by changes in the Project Schedule or other measures which have no material adverse impact on the Contractor in terms of cost or otherwise, the Contractor shall employ those measures so that no extension is required or so that a shorter extension is required. If the Contractor is entitled to extensions for delays, and if the College (in its sole discretion) notifies the Contractor in writing that it prefers to eliminate the lost time to avoid or reduce the extension required, by changes or additional efforts such as acceleration efforts, the Contractor shall perform those measures as a change to the Contract to be compensated under the change order provisions in the Contract for Construction and these General Conditions.

9.6 Requests For Extensions Required.

The Contractor must provide the College with a written notice of delay and request for an extension within 24 hours of the beginning of a delay. The written notice of delay and request for extension must include the nature and cause of the delay, the known extent of the delay, the Work activities on the Project Schedule affected by the delay, and the extent of the effect to each, and suggestions or proposals to reduce or eliminate the delay. This limited time frame is to provide the College the opportunity to immediately address the issue and limit the amount of time in the potential delay and its potential impact on the Project Schedule.

9.7 SECTION WAS DELETED

ARTICLE 10
PAYMENTS TO THE CONTRACTOR.

10.1 Contract Price.

The College will pay the Contractor as full compensation for performing the Work the Contract Price as adjusted by approved change orders that increase or decrease the Contract Price. The College will do so in accordance with this Article, any supplemental General Conditions regarding payment, and the payment terms in the Contract for Construction. Payment provisions in the supplemental General Conditions that add to or modify this Article shall take precedence over this Article. Payment provisions in the Contract for Construction that add to or modify payment terms shall take precedence over the supplemental General Conditions and this Article.

10.2 Monthly Progress Payments.

The College will pay the Contractor monthly progress payments as the Work proceeds and will pay for the Work completed, less retainage. The Contractor shall submit monthly invoices using the College's invoice form for the Work completed in each calendar month, and the monthly invoice shall be submitted in accordance with the Contract. The Contractor shall be entitled to monthly progress payments based on the percentage of the Work completed (less earlier payments), and that amount shall be based on the Unit Schedule Breakdown and the update of the Project Schedule for the billing period showing schedule activities completed and progress on incomplete activities, in conjunction with the values assigned to those activities. If there is a discrepancy between the amount due based on the Unit Schedule Breakdown and the amount due based on the Project Schedule update, the Contractor shall only be entitled to the lesser amount unless the College's Representative, in his/her sole discretion, decides otherwise. Payments made by the College shall be used by the Contractor solely for purposes of this Project and for paying Subcontractors, suppliers, and for labor and materials, and shall not be used to pay debts owed by the Contractor outside of the Project.

10.3 Unit Schedule Breakdown/CPM Activity Price Breakdown.

Before the Contract for Construction is signed, the Contractor shall submit to the College and the Architect a Unit Schedule Breakdown (schedule of values) utilizing the College's form (AIA Documents G702/G703) which reasonably allocates the Contract Price among the principal categories of Work and materials in the Contract. The Unit Schedule Breakdown must be signed by the Contractor and is subject to written approval by the Architect and the College for use in calculating monthly progress payments under the Contract. The Contractor shall not "front end load" the Unit Schedule Breakdown. The Unit Schedule Breakdown may include line items for mobilization, bonds and insurance.

The Contractor's proposed Project Schedule shall reasonably allocate the Contract Price among the activities in the schedule so that monthly Project Schedule updates can be utilized in connection with the Unit Schedule Breakdown in determining the amount of monthly progress payments. The Contractor's Unit Schedule Breakdown and Project Schedule activity price breakdown must be approved in writing by the Architect and the College before any payments are made under the Contract.

10.4 Invoices For Monthly Progress Payments: Form and Content.

The Contractor must utilize the College's invoice form and the invoice forms (AIA Documents G702/G703 and waiver attachments) must be completed before they are submitted for payment. Each invoice must be signed by the Contractor, and shall certify that the Work and materials represented as having been provided have been provided, and that all Subcontractors and suppliers on the Project have been paid all amounts legitimately due for Work and materials billed to the College in earlier invoices that were paid by the College. The Contractor's submission of an invoice constitutes an affirmative representation and warranty by the Contractor that it performed the Work in compliance with the Contract Documents and applicable laws, codes and regulations.

Invoices for monthly Project payments must include the status of the Work in the Unit Schedule Breakdown and the Project Schedule update for the billing period that shows the activities completed or started and the value of them based on the Project Schedule. Invoices must also include certified payrolls for the Contractor and all Subcontractors for the billing period, affirmative action monthly manning reports, a certification of Subcontractor/supplier payments, the College's acknowledgment of progress payment and release of liens and claims form duly executed by the Contractor, the College's acknowledgment of progress payment and release of liens and claims form duly executed by each Subcontractor and supplier who has furnished labor or materials that are the subject of the current invoice, a list of all materials stored to date including descriptions, values, quantities and location, and any other documents required in the Contract Documents.

The Contractor will be entitled to have an invoice paid if the Architect and the College approve in writing the invoice including the percentage of Work completed, and if the quality of the Work and materials conform to the Contract Documents. The approval of invoices shall not waive claims for defects or deficiencies in the Work or materials provided, or the right to subsequently inspect the Project as a complete and functioning whole.

10.5 Payment For Materials And Equipment Procured But Not Installed.

The Contractor may seek payment in monthly invoices for materials and equipment delivered to the Project site but not yet incorporated into the Work. The Contractor shall include with its monthly invoices a list of the stored equipment, the amount and type of stored materials, and the place where they are stored. Each invoice that seeks payment for materials and equipment delivered to the Project site but not installed or incorporated into the Work shall include a signed bill of sale to the College and an invoice from the supplier. All risk of loss or damage for materials and equipment delivered to the Project site shall remain with the Contractor.

The College will only rarely pay for material or equipment stored offsite, and only when it determines, in its sole discretion, that there is good cause. The College will consider no request to pay for materials or equipment stored off site unless the Contractor includes a written request for such payment with its bid for the Project. If the College does agree to pay for material or equipment stored offsite during the performance of the Contract, it will do so when the Contract for Construction is signed.

If the College does agree to pay for materials and equipment stored offsite, such payments shall be subject to any conditions in the signed Contract, and in all cases, a bill of sale to the College, a paid invoice, insurance and proof the storage facility is bonded will have to be provided to the College when each payment is sought. The location will have to be specified in writing and the material or equipment will have to be inspected by the College. The Contractor and its performance bond surety must agree in writing that they retain all risk of loss or damage, and each payment application must contain a consent to payments for materials stored offsite signed by the Contractor's bonding company.

Payments on account of materials or equipment not incorporated into the Work but delivered and suitably stored at the site, or at some other location agreed upon in writing, may be made by the College subject to the following conditions:

(a) Such materials or equipment shall have been fabricated or assembled specifically for the Project and delivered to storage no earlier than needed for the orderly progress of the Work as demonstrated by the Project Schedule.

(b) Title to such materials or equipment shall pass to the College pursuant to the Contractor's bill of sale, which shall contain guarantee of replacement thereof in the event of damage thereto or disappearance thereof due to any cause. The Contractor shall also affirm that it will pay for such materials or equipment immediately upon receipt of payment therefore from the College.

In the case of offsite storage, the Contractor shall also provide Consent of Surety to such payment and insurance of such materials or equipment against the perils set forth in these General Conditions both while storage and during transportation to the site. Raw materials or other materials or equipment readily duplicated or usable on other projects will be paid for only

after the materials are incorporated into the construction.

10.6 Retainage.

The College will retain 2% of the amount due on each partial payment pending Final Completion of the Contract.

Retainage amounts being withheld by the College shall be released and paid in full to the Contractor within 45 days of the Final Completion Date agreed upon by the Contractor and the College, without further withholding of any amounts for any purpose whatsoever, provided that the Work has been Finally Completed as indicated.

10.7 Payment For Change Order Work.

The Contractor shall invoice for change order work in the monthly progress payment invoices as the change order work is performed, but may only do so after a written change order has been signed by the appropriate College personnel and a TCNJ Purchase Order is issued by the College.

10.8 Final Payment.

Upon Final Completion of all the Work including all change orders, upon final acceptance of the Work by the Architect and the College, and upon the issuance of the Certificate of Final Completion, the Contractor will be paid the fully adjusted Contract Price including any retainage. The Contractor shall submit an invoice for the final payment. The final invoice must be accompanied by the College's acceptance of final payment and release of liens and claims form duly executed by the Contractor, the College's acceptance of final payment and release of liens and claims form duly executed by each Subcontractor and supplier who has furnished labor or materials that are the subject of the final invoice, all warranties, guarantees, manufacturer literature, approved as-built drawings, shop drawings required, and any other documents that the Contractor is required by the Contract Documents to provide to the College at the time of Final Completion. The final invoice must also include a written signed consent to the final payment signed by the Contractor's bonding company.

10.9 Payment Terms.

All invoices and payments shall be subject to the terms of the Contract for Construction and these General Conditions, including the provisions regarding payments, and to the right of the College to withhold payments or to make deductions from payments for damages, defective work, liquidated damages, third-party claims, failure to complete Work, failure to comply with requirements of the Contract Documents, failure to comply with Prevailing Wage Act requirements set forth in the Contract for Construction and these General Conditions, failure to comply with Project Schedule obligations, or other causes authorized by the Contract Documents.

10.10 Payment Based On Partial Acceptance (Limitation).

The College will not accept portions of the Project as Substantially or Finally Complete unless specified elsewhere in the Contract Documents. If the Specifications authorize partial acceptances, they will also specify the terms and conditions of such acceptances.

10.11 Failure To Pay Amounts In Dispute Not To Affect Performance.

The failure of the College to pay any amount requested by the Contractor in an invoice based on a determination that the invoice is improper or some other dispute shall not entitle the Contractor to stop or slow down the performance of the Work.

10.12 Reasons For Withholding Payment.

In addition to the reasons set forth elsewhere in the Contract for Construction and these General Conditions, the Architect or the College may also withhold payments to the Contractor, or, because of subsequently discovered evidence, may nullify the whole or a part of a payments previously issued to the Contractor, to such extent as may be necessary in the Architect's or the College's opinion to protect the College from loss for which the Contractor is responsible because of

(a) defective Work not remedied;
(b) third party claims filed or reasonable evidence indicating probable filing of such claims unless security acceptable to the College is provided by the Contractor;
(c) failure of the Contractor to make payments properly to Subcontractors or for labor, materials or equipment;
(d) reasonable evidence that the Work cannot be completed for the unpaid balance of the Contract Price;
(e) damage to the College or a separate contractor;
(f) failure to comply with requirements for monthly progress payments pursuant to Article 10.4; or
(g) failure to carry out the Work in accordance with the Contract Documents.

When the above reasons for withholding payment are removed, payment will be made for amounts previously withheld.

If the College withholds or the Architect recommends that the College should withhold payment from the Contractor under subsection (c) above, the College may, after providing the Contractor with written notice and an opportunity to cure, issue joint checks to the Contractor and to any Subcontractor or material or equipment suppliers to whom the Contractor failed to make payment for Work properly performed or material or equipment suitably delivered. However, by doing so, the College is not undertaking any payment obligation on the part of the

Contractor, nor does any Subcontractor have any claims against the College or any right to future joint check payments.

10.13 Set-Off For State Tax Indebtedness.

Pursuant to N.J.S.A. 54:49-19, and notwithstanding any other provision of law to the contrary, if the Contractor or any of its Subcontractors or suppliers are indebted to the State of New Jersey for any State tax, the College may withhold and/or set off any payments due to the Contractor as may be necessary to satisfy such indebtedness and/or pending resolution of the indebtedness.

10.14 Maintenance Of Cost And Accounting Records.

The Contractor shall maintain and retain weekly payroll, material, Subcontractor, supplier, overhead and other cost and accounting records for the Project, and for additional services or extras required by the College, including all costs that the Contractor is entitled to be paid under the Contract. The Contractor shall require its Subcontractors on the Project to do likewise. The Contractor shall also maintain all estimates and takeoffs used in preparing and calculating its bid price for the Contract and change orders. The Contractor shall also maintain all documentation related to products, transactions or services under the Contract. The records shall be maintained and shall be made available to the College or its representatives when requested. These records shall be maintained in accordance with generally accepted accounting principles and practices for a period of 5 years after final payment is received by the Contractor, or the duration of any dispute or lawsuit arising out of the Project, whichever is later, and shall be made available to the College or its representatives and the New Jersey Office of the State Comptroller when requested.

Any failure to maintain or produce the records required by this Article may limit the Contractor from being paid on any claims that are based on costs and expenses or losses incurred by the Contractor or its Subcontractors including extra costs that are or that should be reflected in the records required by this Article or good business practices. This record keeping requirement applies to records related to the basic Contract Price as well as extra compensation for change orders and claims of all kinds.

No claim by the Contractor against the College for payment, whether for Contract Work, extras, changes or claims that is based to any degree on costs that should be recorded in cost records required by this Article or good business practices may be asserted against the College to the extent the cost records do not exist or are not provided to the College upon demand.

The College reserves the right to audit the records of the Contractor and its Subcontractors at any time and for up to 3 years after the Final Completion of the Project. If an audit reveals overpayment by the College, the Contractor shall refund the cost of the audit and the overpayment to the College, or the College may deduct the cost of the audit and the overpayment from future payments under the Contract, or the College may assert claims against the Contractor and/or its surety for the cost of the audit and such overpayments.

10.15 Written Evidence of Payment to Subcontractors.

The College has the right to request written evidence from the Contractor that the Contractor has properly paid Subcontractors and material and equipment suppliers' amounts paid by the College to the Contractor for subcontracted Work. Such evidence shall include acknowledgment of progress payment and release of liens and claims forms duly executed by each Subcontractor and supplier for payments previously made to the Contractor. If the Contractor fails to furnish the College with the written evidence that it has properly paid Subcontractors and material and equipment suppliers, the College shall have the right to contact Subcontractors to ascertain whether they have been properly paid. Neither the College nor Architect shall have an obligation to pay or to see to the payment of money to a Subcontractor, except as may otherwise be required by law. The College may, in its sole discretion, issue checks made payable jointly to the Contractor and a Subcontractor; however, by doing so, the College is not undertaking any obligation on the part of the Contractor, nor does the Subcontractor have any claims against the College nor any right to future joint check payments.

ARTICLE 11
CHANGES.

11.1 Changes Authorized.

The College may at any time authorize and direct changes in the Work or accelerations of the Work that change the scope of the Work and that increase or decrease the Contract Price. All changes including changes in the Contract Price shall be governed by this Article. All changes must be in a written change order signed by the Vice President for Administration, the College's Representative, the Architect and the Contractor. A TCNJ Purchase Order will then be issued by the College and signed by the Contracting Officer, after which time, the Contractor can then bill for the completed change order Work. Any extensions in the Contract Times and increases in the Contract Price because of extensions resulting from changes shall be governed by Article 9of these General Conditions regarding extensions, but the authorization for the extra compensation itself resulting from an extension must be contained in a change order that complies with this Article as well. The College may elect to have changed Work on the Project that is within the scope of the Contract Documents performed by another contractor. Changes in the Work shall not affect the surety bond protection or insurance coverage required by the Contract Documents.

11.2 Change Request Or Directive.

The College may request a change in the Work or materials to be provided under the Contract Documents by a written Contract Change Directive ("CCD") signed by the College's Representative. If the College is of the opinion that no change in the Contract Price or Contract Times is required because of the change request, it shall so state in the CCD. A CCD may include provisions regarding the scope of the changed Work or materials, and may also include conditions including time parameters. A CCD may provide that specified Work shall stop until further notice, but the Contractor shall not stop or delay any Work because of a CCD unless the CCD provides that Work should stop because of the change. A CCD may provide that the performance of changes shall not commence until a change order is issued and a subsequent

TCNJ Purchase Order is issued and signed by the Contracting Officer, or that changed Work should proceed before a change order and TCNJ Purchase Order are issued by the College to maintain the progress of the Project.

11.3 Change Orders Which Are Protested.

If the Contractor protests the terms of a change order, it shall notify the College of its protest in writing within 2 business days of the issuance of the Change Order. It shall describe the terms that it objects to and the reasons for its protest. It shall include supporting documentation if appropriate, including detailed justification for any Contractor requested additional compensation based upon unavoidable additional costs. The College may elect to direct the Contractor in writing to perform the change order requirements despite the protest. If it does so, the Contractor's right to pursue further relief based on the protest shall be preserved and the Contractor shall immediately proceed with the change Work

11.4 Changes Affecting Contract Times.

Changes and change orders shall not affect or extend any of the Contract Times unless the change order itself specifies that it changes Contract Times. If a change order issued by the College delays the completion of any activity in the Project Schedule, the time allowed for that activity shall be extended, and if a delay in that activity delays other activities, the critical path or the Completion Dates in the Contract, they too will be extended. The Contractor shall make reasonable efforts in scheduling changed Work so that it does not delay or extend activities in the Project Schedule critical path, including any Milestone Dates, the Substantial Completion Date and the Final Completion Date. The Contractor shall also make alternate proposals for change order Work that include acceleration for the changed Work where feasible to achieve this goal, and shall include the cost of such efforts in its change order requests and proposals.

Change orders must specify whether they result in any delay (or extension) to any critical path activities in the Project Schedule, including an identification of the activities and the amount of delay in each. If no delay or extension is set forth in a change order, it will be deemed an agreement by the College and the Contractor that no delay or extension results from the change order.

11.5 Contractor Initiated Change Order Requests.

If the Contractor contends that any directive or communication from the College or Architect, or any condition, event or circumstance entitles it to a change order changing the scope of the Work, terms of the Contract Documents, Contract Price or Contract Times, it shall submit a written change order request to the College's Representative within 5 days of the event upon which the request is based. The written request shall specify the terms of the change order requested, and include all documentation and information that the Contractor seeks to have considered in support of the request, or that is necessary to a proper consideration of the request.

11.6 Change Order Amounts.

All price changes or amounts in change orders shall be based on (i) lump sum, (ii) actual work time and materials plus mark-ups for overhead and profit, or (iii) unit prices times actual quantities that may or may not include separate mark-ups for overhead and profit. If a change order price is to be based on a lump sum price or a unit price, the College may request the submission of such documentation regarding market price or cost which it reasonably deems necessary to determine a lump sum or unit price. If a change order is based on actual work time and material costs, it will include a not-to-exceed price.

Applications for payment for change order Work shall be included in monthly progress payment invoices as the change order work is performed, but only after a TCNJ Purchase Order has been issued to the Contractor by the College. For change orders based on time and material costs or unit prices times actual quantities, the time spent, material provided, and quantities performed shall be recorded in daily time slips, material invoices, and quantity of work performed tickets that are signed by the College's Representative to certify that the Work and materials were provided, and the quantities. Labor costs and material costs for change orders shall be based on actual costs to the Contractor without any mark-ups except as provided in this Article.

Mark-ups may be added to time and material costs where a change order is authorized to be paid on a time and material basis, and also unit price change orders if the change order price term expressly authorizes mark-ups as a separate additional charge to be added to the unit price. When mark-ups for overhead and profit are authorized, the standard mark-up for overhead and profit shall be 15% of net costs properly invoiced in the change order. The schedule for mark ups is as follows:

- 15% of direct costs for overhead, profit, bond, and insurance for Work performed directly by the Contractor;
- 15% of direct costs for overhead, profit, bond, and insurance for Work performed directly by the Subcontractor and 5% of the direct and indirect costs of the Work performed by the Subcontractor for the Contractor; and
- 15% of direct costs for overhead, profit, bond, and insurance for Work performed directly by the Subcontractor's subcontractor and 5% of the direct and indirect costs of the Work performed by the Subcontractor's subcontractor for the Subcontractor and 5% of the direct and indirect costs of the Work performed by the Subcontractor for the Contractor.

There shall be no additional mark-ups for materials or supplies. Bond and insurance costs are included in the noted mark ups above. Refer to Division 1 Specifications also for further delineation of items included in mark-ups.

THE CONTRACTOR MUST USE THE COLLEGE'S CHANGE ORDER FORM INCLUDED IN THE PAYMENT PROCEDURE DOCUMENTS.

11.7 Right To Audit Extra Costs (Before And After Payment).

The College reserves the right to audit all change orders and additional costs claimed and/or paid under the Contract at any time. The obligation of the Contractor, Subcontractors and suppliers to establish, maintain and produce cost records and remedies for failing to do as specified elsewhere in these General Conditions and the Contract for Construction shall govern. If an audit reveals that actual costs invoiced to the College and/or paid by the College in change orders exceed the actual costs incurred, the Contractor shall refund the excess, or the College may deduct the excess from future payments under the Contract, or the College may assert claims against the Contractor and/or its surety for such overpayments.

11.8 Change Orders With Both Price Increases and Decreases.

If a change order reduces the scope of the Work or materials to be provided by the Contractor under the Contract, the change order shall provide for a reduction in the Contract Price in the amount of the actual reduction in cost. If a change order results in both added costs and reduced costs, they shall be combined for a net plus or minus Contract Price adjustment, and when mark-ups are applicable, they shall only be added to a net increase in the Contract Price which results from a combination of additions and deductions in the change order.

11.9 Waiver Of Rights In Connection With Change Orders Issued Without Protest.

The Contractor shall not be entitled to seek any additional compensation or any extension of the Contract Times beyond the amounts and any extensions included in a change order signed by the College or a written change order request submitted by the Contractor to the College for approval, the intent being that the Contractor must disclose all additional costs and delays claimed to result from a change so that the College can take measures in considering the change to effect cost savings and avoid delays. The failure to include extra costs or delays in a change order request will preclude the Contractor from later claiming such costs or delays in connection with the change in any form or fashion.

ARTICLE 12
COMPLETION.

12.1 Substantial Completion.

When the Contractor believes that the Project (or a specific phase of the Work, if the Work is to be performed in phases) is Substantially Complete, meaning all essential requirements of the Work have been sufficiently completed so that the Project (or a specific phase) can be occupied and used for its intended purpose (and as further defined in the College's Division 1 specifications for capital projects), it can make a written request to the Architect and the College to conduct an inspection and to issue a Certificate of Substantial Completion. The Contractor's request shall list all Work and requirements of the Contract Documents that remain to be completed or corrected and an estimate of the value of the incomplete items and the dates by which those items of the Work will be completed, but in no event shall it be more than thirty (30) days from Substantial Completion.

The Architect and the College will conduct an inspection, and if they determine the Contractor has Substantially Completed the Project (or a specific phase of the Work, if the Work is to be performed in phases), the College will issue a Certificate of Substantial Completion. If the Architect and the College determine that the Contractor has not achieved Substantial Completion, the College will notify the Contractor in writing and will list the Work and requirements of the Contract Documents that must be completed for Substantial Completion and provide a punch list. The Architect and the College will also assign a value to the incomplete items to be added to the 2% retainage held after the Certificate of Substantial Completion is issued. The College and the Architect will re-inspect when the Contractor notifies them in writing that those items have been completed.

Any failure of the College or Architect to include incomplete or deficient items in a Certificate of Substantial Completion or a notice regarding a Substantial Completion inspection shall not affect the Contractor's obligation to properly complete all requirements of the Contract.

The College will not issue a Certificate of Substantial Completion unless it can occupy and use the Project (or the phase of the Work) for its intended purpose, and the Contractor agrees that the College's use and occupancy of the Project (or the phase of the Work) shall not affect the Contractor's obligation to complete the Project and requirements of the Contract Documents. The Contractor also agrees that its completion of the Project will not unreasonably interfere with the College's occupancy and use of the Project (or the phase of the Work) and that the College's occupancy will not impede the Contractor's completion of the Work to Final Completion.

Unless otherwise specified in the supplemental General Conditions, a Certificate of Substantial Completion will not be issued unless an unqualified temporary or permanent certificate of occupancy is issued, and the College is able to use and occupy the Project (or the phase of the Work) without interruption.

The issuance of a Certificate of Substantial Completion shall not void or alter any of the other terms of the Contract Documents, including but not limited to terms relating to warranties, or relieve the Contractor of its obligation to complete the Work or remedy defective Work or materials, unless such terms are expressly modified by the Certificate of Substantial Completion.

Guarantee periods for equipment, workmanship and materials shall commence when the Certificate of Substantial Completion is issued or from the completion and acceptance of equipment, workmanship or materials, whichever is later, unless otherwise specified in the supplemental General Conditions or the Certificate of Substantial Completion.

The rights of the Contractor regarding payments upon the issuance of the Certificate of Substantial Completion shall be as provided in the payment provisions of the Contract for Construction and these General Conditions.

12.2 Final Completion.

The Contractor shall notify the Architect and the College in writing when it has completed the entire Project (or a specific phase of the Work, if the Work is to be performed in

phases) and has satisfied all of the requirements of the Contract Documents for Final Completion. The Architect and the College will then conduct an inspection, and if they determine that the Contractor has completed the entire Project (or a specific phase of the Work, if the Work is to be performed in phases) and has satisfied all of the requirements of the Contract Documents for Final Completion, the College will then issue a Certificate of Final Completion. If any items remain incomplete or unsatisfactory, the College will notify the Contractor inwriting and list the incomplete or unsatisfactory items. The Contractor shall immediately complete and correct any unfinished items and notify the Architect and the College in writing and request a follow-up inspection for Final Completion.

The Certificate of Final Completion will not be issued until all documents required by the Contract Documents have been provided, including the College's acceptance of final payment and release of liens and claims forms duly executed by the Contractor and any Subcontractors and suppliers who have furnished labor or materials under the Contract, warranties, maintenance and operating instructions, certificates, insurance, shop drawings required, and as-built drawings approved by the Architect. Final Completion must include leaving the entire Project site and the Project (or the phase of the Work) clean, neat and orderly. All distortions, cracks, delaminating and deteriorations of finished surfaces must be remedied. All broken items shall be repaired. All paint spots, stains and plaster must be removed. All unused equipment and excess material shall be removed. The Project and the Project site (or the phase of the Work) shall be clean and finished.

If the Contractor unreasonably delays completing and correcting items needed for the issuance of the Certificate of Final Completion, the College may unilaterally issue a Certificate of Final Completion that lists incomplete and defective items, and that deducts any applicable liquidated damages and the cost of remedying incomplete and defective items from the final amount due to the Contractor under the Contract.

Final payment will not be made until the Certificate of Final Completion is issued, and the final payment shall be subject to the payment provisions in the Contract for Construction and these General Conditions.

ARTICLE 13
SUSPENSION AND TERMINATION OF CONTRACT.

13.1 Suspension By The College.

The College shall have the right to stop or suspend the Work in whole or in part at any time. The Work may only be stopped or suspended by a written directive of the College's Representative, except in an emergency. The College's Representative may stop or suspend the Work in whole or in part on an emergent basis, either verbally or in writing, but any such emergent suspension or stop Work order shall be confirmed by a written directive from the College's Representative within 48 hours. The College may stop or suspend the Work because of any conditions affecting health or safety on or off site, any dangerous condition, any environmental hazard, the convenience of the College, or the public interest. If a directive to

stop or suspend all or part of the Work includes directions to secure the site, the Contractor shall perform the Work required in the directive. The Contractor shall also maintain the safety and security of the Project during the suspension for the protection of the site, Work in place, materials and equipment on site, persons on or near the site, and the College's property.

If all or part of the Work is suspended in response to a problem or condition caused by the Contractor's performance of its Contract, or parties other than the College itself, or conditions over which the College has no control, the Contractor will not be entitled to any additional compensation for the suspension. If the College directs the suspension of Work because of the improper performance of the Contract by the Contractor or those performing its Contract, the Contractor will not be entitled to any extension of any Contract Times or additional compensation by reason of the suspension. If a suspension is directed for reasons other than the fault of the Contractor or others involved in its performance of the Contract, the Contractor will be entitled to an extension under and to the extent authorized in Article 9, and additional compensation under and to the extent authorized by Article 11.

13.2 Termination For Convenience.

The College may, by a written directive, terminate the Contract at any time before completion for the College's convenience or where it concludes that it is in the public interest to do so. The Contractor shall complete any items of Work specified in the notice of termination for convenience and any Work necessary to make the site safe for all persons and property at or near the Project site when the College terminates the Contract for convenience under this Article.

Absent the Contractor fault or violation of the Contract, the Contractor shall be paid in full for all properly completed Work, subject to the payment provisions in the Contract for Construction and these General Conditions. The Contractor will not be entitled to payment for costs and mark-ups for Work or materials not provided before the termination, or costs for Work and materials not provided unless the Contractor cannot avoid liability to pay those costs, or profit or overhead on the portion of the Contract that will not be performed because of the termination, or other types of damages. The extra compensation payable to the Contractor in connection with a termination for convenience may include the cost of materials or equipment purchased for the Project before termination but not installed if the Contractor cannot otherwise use or sell them.

The Contractor will also be entitled to reasonable termination costs in reasonable amounts for additional direct costs in connection with the termination, but not administrative, home office or overhead costs, lost profit, or consequential damages. In addition, any claims shall be subject to the provisions in the Contract for Construction and these General Conditions regarding claims and the maintenance of cost records.

The Contractor shall include provisions similar to this Article in subcontracts and supply contracts for the Project. When a termination for convenience is directed by the College, the Contract shall be closed out in accordance with the provisions of the Contract for Construction and these General Conditions regarding payment and Project completion.

13.3 Termination For Cause.

The College may terminate the Contract for cause if the Contractor (i) commits violations of the Contract Documents, (ii) fails to perform the Work in accordance with the Contract Documents including the Project Schedule, (iii) fails to comply with applicable laws, rules or regulations, (iv) fails to pay Subcontractors or suppliers to the extent reasonably required, (v) becomes insolvent or becomes a debtor in a bankruptcy proceeding, (vi) fails to pay its debts, (vii) is found to have made false or misleading statements to the College in writing in obtaining the Contract or payments, (viii) fails to comply with employment discrimination laws, (ix) fails to pay prevailing wages, (x) fails to maintain or renew the required insurance, (xi) fails to maintain proper protection for the safety of persons or property on the site, (xii) fails to comply with reasonable and authorized directives of the College under the Contract, or (xiii) assigns its rights or interests under the Contract or payments under the Contract to any third party.

If the College terminates the Contract for cause, it shall first send a notice of intent to terminate to the Contractor and the Contractor's surety. The notice shall direct the Contractor to remedy or eliminate the deficiency within a specified time if the problem is one that can be eliminated. If the Contractor fails to reasonably comply with the directive and notice, the College may after 10 days issue a notice of termination to the Contractor and its surety which terminates the Contract effective immediately and specifies the reason for the termination.

If the Contract is terminated, the Contractor shall secure the site and take measures to leave the site safe for persons, material, Work in place and equipment before departing the site, and shall remove all tools and equipment within 5 days of the termination effective date. The Contractor shall not remove any materials or equipment stored on site unless directed to do so by the College. When the Contract is terminated, the Contractor shall deliver materials purchased for the Project and paid for by the College, but not stored on site, together with all appropriate warranties and guaranties to any location designated by the College.

If the Contractor's surety does not take over the completion of the Work in accordance with this Article, the College may appropriate any or all materials on the site that may be suitable and acceptable and may enter into an agreement for the completion of the Work with another contractor, or use other methods to complete the Work.

All damages, costs and charges incurred by the College together with the cost of completing the Work, will be deducted from any monies due or which may become due to the Contractor for Work properly completed by it before the termination. If such expenses exceed the sum available from the unpaid Contract Price, the Contractor and its surety shall be liable and shall pay to the College the amount of such excess in addition to other damages.

The rights and remedies of the College in connection with a termination for cause shall be in addition to other rights and remedies which it has under law, the Contract, and the Contractor's bond.

If the College terminates the Contract for cause and it is subsequently determined by a court that the Contractor was not in default, or that the termination was legally unjustified, the termination will be deemed to be a termination for convenience under this Article, and the rights

and remedies of the Contractor and its surety for the termination will be limited to those which exist in connection with a termination for convenience. If the College terminates the Contract for cause, the Contractor may not file a suit to recover on any claims arising out of the Project before the Work is Substantially Complete.

13.4 Surety Takeover Following Termination For Cause.

If the College terminates the Contractor for cause, the Contractor's performance bond surety may elect to takeover and complete the Contractor's Work and obligations under its Contract. If the surety elects to take over the completion of the Contract, it may only do so on the following conditions:

(a) The surety must notify the College that it will take over completion of the Contract by a written notice of intent signed by a representative authorized to bind the surety within 5 calendar days of the surety's receipt of the College's notice of termination.

(b) The surety and the College must execute a written takeover agreement within 10 days after the surety sends its notice of intent to takeover. The takeover agreement signed by the surety and the College, must:

  i. contain an acknowledgement and agreement by the surety to assume the obligation to complete the balance of the Work under the Contract and to perform all of the Contractor's obligations under the Contract at the surety's sole cost and expense, and to utilize only contractors approved by the College to complete the Work, which approval shall not be unreasonably withheld;

  ii. provide that the surety is entitled to be paid the unpaid balance under the terminated Contractor's Contract in accordance with and subject to the terms of the Contract for Construction and these General Conditions;

  iii. provide that the surety is not relieved of any of its obligations under its payment and performance bond for the Project, and that the College retains its right to withhold money for Contract payments to compensate for damages or for other reasons where authorized under the Contract for Construction or these General Conditions; and

  iv. provide that it is without prejudice to and is subject to all of the rights and remedies of the College, the surety, and the defaulted Contractor, and the surety may not require the College to agree to a takeover agreement that seeks to extinguish any such rights.

(c) The surety must also pay without delay all obligations of the terminated Contractor for Work and materials on the Project, subject to a reasonable allowance of time to investigate and verify claims.

13.5 Suspension By The Contractor For Non-Payment.

If the Contractor is not paid sums due under an approved invoice within thirty (30) days of the billing date, it may suspend performance without penalty for breach of Contract, but only

after providing the College with 7 days written notice of non-payment, and only in the event that the College fails to furnish the Contractor, within that 7-day period, with a written statement of the amount withheld and the reasons for the withholding. Nothing herein shall be construed to excuse the Contractor's nonperformance, or to limit the College's rights and remedies relating to such nonperformance, with regard to any monies withheld from the Contractor upon the proper notice provided under this Article, or with regard to any Contractor claim disputed by the College.

ARTICLE 14
WARRANTY/DEFECTIVE WORK AND MATERIALS

14.1 General Work One Year Warranty; HVAC Systems Two Year Warranty

The Contractor warrants and guarantees for a one year period that all Work, materials and equipment conform to the Contract Documents and will not fail or manifest defects, that the Project and all its components will be fit for their intended functions, and that all material and equipment will be new and of good quality.

The general one year warranty period (or two year warranty period for HVAC work) shall commence when the Certificate of Substantial Completion is issued, and the one year period (or two year period for HVAC work) shall commence on that date for all components of the Project, including any equipment activated and operated before Substantial Completion, such as HVAC systems, electrical systems and elevators.

During the one year warranty period (or two year warranty period for HVAC work), the Contractor shall repair and remedy at its own expense any premature failure, defects or deficiencies in any Work, materials or equipment that are discovered or that develop during the one year period (or two year period for HVAC work), and shall do so within 5 days after receipt of a written warranty claim from the College. The Contractor shall also repair damages caused by any failure or defect covered by this warranty. A failure to provide the warranty service required shall constitute a breach of this warranty obligation as well as other applicable provisions of the Contract. This warranty shall not cover failures caused solely by substantial misuse or abuse by the College.

This general one year warranty (or two year warranty for HVAC work) is intended to provide the College with prompt warranty service for all aspects of the Project for the one year period (or two year period for HVAC work). It is not intended to limit or extinguish any additional warranties required by any of the Contract Documents, or provided by manufacturers of systems, equipment or materials provided under the Contract. It is not intended to eliminate or reduce the College's rights and remedies under the Contract Documents and law for defects and deficiencies in the Work, materials and equipment, or the time period of the Contractor's general responsibility and liability.

14.2 Defective Work, Materials And Equipment.

Apart from the general one-year warranty provided for in this Article, the Contractor shall be responsible for defective Work, materials and equipment and any failure of these items to comply with the Contract Documents. This obligation shall extend beyond Substantial Completion, Final Completion and the general one year warranty (or two year warranty for HVAC work) in this Article.

If defects in the Work, materials or equipment or non-conforming items are discovered during construction and before Final Completion, the Contractor shall promptly correct them at its own expense. If the Contractor fails to correct defective or non-conforming Work, material or equipment in response to a written notice form the College, either during construction or after Final Completion, the College may employ others to provide the remedial work and the Contractor and its surety shall be liable for the cost thereof and damages incurred by the College. The Contractor and its surety shall also be liable for the cost of making good all Work and material destroyed or damaged by defects or the correction of defects.

If any portion of the Contractor's Contract Price remains in the custody of the College, either earned or unearned, the College may deduct money paid to others to remedy defects after notice is sent to the Contractor and damages incurred by the College when the Contractor fails to provide a remedy in response. The Contractor's responsibility for defects and non-conforming Work, material and equipment shall not be limited in time except by applicable law.

The Contractor's responsibility for defective Work shall not be affected by either the performance or the lack of performance of inspections by the College or the Architect. The issuance of payments, a Certificate of Substantial Completion or a Certificate of Final Completion shall not constitute acceptance of Work, material or equipment that is deficient or not in compliance with the Contract, or limit the Contractor's warranty or the other Contract obligations.

ARTICLE 15
INDEMNIFICATION/LIABILITY TO THIRD PARTIES.

15.1 The Contractor's Indemnification Obligation.

To the fullest extent permitted by law, the Contractor shall defend, indemnify, and hold harmless the College, the State of New Jersey, the New Jersey Educational Facilities Authority, Trenton State College Corporation, and any other persons or entities designated by the College, and the officers, directors, principals, attorneys, agents, servants, and employees of any of them (collectively the "Indemnified Parties") from and against claims, damages, losses and expenses, including but not limited to attorneys' fees, arising out of or resulting from: (1) performance of the Work, whether such claim, damage, loss or expense is attributable to bodily injury, sickness, disease or death, or to injury to or destruction of tangible property, including loss of use resulting therefrom caused in whole or in part by the negligent or willful acts or omissions of the Contractor, Subcontractor, anyone directly or indirectly employed by them, or anyone for whose acts they may be liable, regardless of whether or not such claim, damage, loss or expense is caused in part by a party indemnified hereunder or (2) any one or more of the items set forth in

this Article. Such obligation shall not be construed to negate, abridge, or reduce other rights or obligations of indemnity which would otherwise exist as to a party or person described in this Article.

In claims against any person or entity indemnified under this Article by an employee of the Contractor, a Subcontractor or anyone directly or indirectly employed by them or anyone for whose acts they may be liable, the indemnification obligation under this Article shall not be limited by a limitation on amount or type of damages, compensation or benefits payable by or for the Contractor or Subcontractor under workers' compensation acts, disability benefit acts or other employee benefit acts, nor shall the same be limited by the types or limits of insurance carried or to be carried by the Contractor or any Subcontractor pursuant to the Contract Documents or otherwise.

The indemnity, defense, and hold harmless obligation set forth in this Article shall be supplemented by the following:

(a) any claims or liens of Subcontractors, except to the extent that the non-payment upon which the claim or lien is predicated resulted solely from the College's wrongful failure to pay the Contractor sums due under the Contract;

(b) any fines, penalties, liquidated damages, assessments or other executions imposed by any governmental authority having jurisdiction over the Project by reason of the Contractor's failure to comply with any requirement of the Contract;

(c) any losses, damages, or expenses incurred by reason of the Contractor's failure to obtain and maintain in force or cause to be obtained and maintained, the insurance required by the terms of the Contract;

(d) any losses, damages, or expenses incurred by reason of any failure (whether or not specifically identified herein) by the Contractor to perform its obligations under the Contract Documents or any breach of the Contract;

(e) any claims, damages, or expenses incurred by reason of the Contractor's infringement or alleged infringement of any patent, copyright, or other intellectual property or similar rights; and

(f) any claims, damages, liquidated damages, penalties, or fines assessed against the College, directly or indirectly, solely or partially by reason of the Contractor's failure to comply with any applicable laws, codes, statutes, or regulations.

If any judgment is rendered against the Indemnified Parties for which indemnification is required under this Article, the Contractor shall satisfy and discharge it. The Contractor shall reimburse the College for reasonable attorney fees, costs and expenses incurred by the Indemnified Parties in the defense of such suit or claim.

The College shall give written notice to the Contractor of claims and suits for which indemnification may be claimed pursuant to this Article.

The foregoing obligations shall survive the completion of the Work and final payment to the Contractor (or the sooner termination of the Contract) with respect to all matters accrued during the term of the Contract and such obligations shall not be construed to negate, abridge or reduce any other rights, obligations or indemnity which would otherwise exist as to a party or person indemnified by this Article.

15.2 The Subcontractor's Indemnification Obligation.

The Contractor shall cause the indemnification obligations set forth in this Article to be included in all contracts with its Subcontractors.

ARTICLE 16
INSURANCE AND BONDS.

16.1 The Contractor's Insurance.

The Contractor shall purchase from, and maintain with a company or companies lawfully authorized to do business in the State of New Jersey, insurance for protection from claims under workers' compensation and other employee benefit acts which are applicable, claims for damages because of bodily injury, including death, and claims for damages, including the Work itself, to property which may arise out of or result from the Contractor's operations and completed operations under the Contract, whether such operations be by the Contractor or by a Subcontractor or anyone directly or indirectly employed by any of them, until at least 1 year after the Final Completion and acceptance of the Project. This insurance shall be written for not less than the limits set forth below or as required by law, whichever coverage is greater, and shall include contractual liability insurance applicable to the Contractor's obligations under Article 15 (Indemnification). The Contractor expressly agrees that any insurance protection required by the Contract Documents shall in no way limit the Contractor's obligations under the Contract, and shall not be construed to relieve the Contractor from liability in excess of such coverage. Nor shall it preclude the College from taking such actions as are available to it under any other provisions of the Contract for Construction, these General Conditions or the law.

16.1.1 Types and Minimum Amounts of Insurance:

(a) **Commercial General Liability Insurance (CGL).** Commercial General Liability insurance ISO CG 00 01 12 07 or later occurrence form of insurance including contractual liability with limits of at least two million dollars ($2,000,000) per occurrence, and at least two million dollars ($2,000,000) in the aggregate. The general aggregate limit shall apply separately to this project/location or the general aggregate limit shall be twice the required occurrence limit. The CGL policy shall also include products/ completed operations with limits of at least two million ($2,000,000) in the aggregate. This insurance shall be maintained for at least one year after the Final Completion of the Project.

(b) **Automobile Liability Insurance.** Comprehensive Automobile Liability insurance covering owned, non-owned, and hired vehicles. The limits of liability shall not be less than one million dollars ($1,000,000) combined single limit for bodily injury and property damage for each occurrence.

(c) **Workers Compensation/ Employer's Liability.** Worker's Compensation Insurance applicable to the laws of the State of New Jersey and other State or Federal jurisdictions required to protect the employees of the Contractor and any Subcontractor, sub-subcontractor or supplier who will be engaged in the performance of the Contract. The certificate must so indicate that no proprietor, partner, executive officer or member is excluded. This insurance shall include Employers' Liability Insurance with a limit of liability not less than one million dollars ($1,000,000) bodily injury, each occurrence, one million dollars ($1,000,000) disease, each employee, and one million dollars ($1,000,000) disease, aggregate limit.

All required insurance coverages must be written by insurance companies acceptable to the College. All insurance companies must have a minimum A.M. Best's financial strength rating of A- or better, or an equivalent rating from another respected rating agency, and an A.M. Best's size rating of VII or greater.

16.1.2 Additional Insureds. All insurance required herein, except Worker' Compensation, shall name The College of New Jersey, the State of New Jersey, the New Jersey Educational Facilities Authority, Trenton State College Corporation and any other persons or entities designated by the College as additional insureds.

16.1.3 Cancellation. The certificates of insurance shall provide for 30 days written notice to the College before any cancellation, expiration or non-renewal during the term the insurance is required by the Contract.

16.1.4 Evidence of Insurance. The Contractor shall when the Contract for Construction is signed and before beginning the Work required under the Contract, provide the College with valid certificates of insurance signed by an insurance provider or authorized agent or underwriter to evidence the Contractor's insurance coverage as required in this Article, and also copies of the policies themselves. The certificates of insurance shall specify that the insurance provided is of the types and in the amounts required in this Article, and that the policies cannot be canceled except after 30 days written notice to the College. The Contractor shall also be required to provide the College with valid certificates of renewal when policies expire. The Contractor shall also, when requested, provide the College with additional copies of each policy and all endorsements required under the Contract, which are certified by an agent or underwriter to be true copies of the policies and endorsements issued to the Contractor.

16.1.5 Remedies for Lack of Insurance. If the Contractor fails to renew any of its required insurance policies, or any policy is canceled, terminated or modified, the College may refuse to pay monies due under the Contract. The College, in its sole discretion and for its sole benefit, may use monies retained under this Article to attempt to renew the Contractor's insurance or obtain substitute coverage if possible for the College's sole benefit, and may invoke other applicable remedies under the Contract for Construction and these General Conditions including claims against the Contractor and its surety. During any period when the required insurance is not in effect, the College may also, in its sole discretion, either suspend the Work under the Contract or terminate the Contract.

16.2 The Subcontractor's Insurance.

The Contractor shall ensure that its Subcontractors purchase and maintain insurance on the same terms and with coverages customary for each trade as required by the Contractor under the Contract. The Contractor shall contractually obligate its Subcontractors to indemnify, defend, and hold harmless the College upon the same terms and conditions that the Contractor is required to do so as provided in Article 15 of these General Conditions (Indemnification).

16.3 Payment And Performance Bond.

The Contractor is required to furnish the College with a payment bond and a performance bond from an approved surety as described in this Article and in the bid documents. The bonds shall conform to N.J.S.A. 2A:44-147. The Contract will not become effective until these bonds are provided to and approved in writing by the College. The bonds must also be accompanied by the surety disclosure statement and certification required by N.J.S.A. 18A:64-68.

ARTICLE 17
DISPUTE RESOLUTION.

17.1 Mediation.

If a dispute or claim arises out of or relates to the Contract, or the breach thereof, and if the dispute cannot be settled through negotiation, the dispute or claim may, at the College's sole option, be subject to mediation administered by the American Arbitration Association under its Construction Industry Mediation Rules as a condition precedent to binding dispute resolution. The parties shall share the mediator's fee and any filing fees equally. The mediation shall be held in Mercer County, New Jersey, at the offices of the College's attorneys, unless another location is mutually agreed upon. Agreements reached in mediation shall be enforceable in any court having jurisdiction thereof.

17.2 Method Of Binding Dispute Resolution.

For any dispute or claim, not resolved by mediation pursuant to this Article, the method of binding dispute resolution shall be litigation in the state or district courts of the State of New Jersey, unless the College, in its sole discretion, decides to submit the dispute or claim to arbitration pursuant to this Article.

17.3 Arbitration (If The College Elects To Arbitrate).

If the College decides, in its sole discretion, to submit a dispute or claim to arbitration rather than litigation as provided above, the arbitration shall be administered by the American Arbitration Association in accordance with its Construction Industry Arbitration Rules in effect on the date of the Contract unless the parties mutually agree otherwise. A demand for arbitration shall be made in writing, delivered to the other party to the Contract, and filed with the person or entity administering the arbitration. The arbitrator shall be a New Jersey licensed attorney with at least twenty (20) years' experience practicing in construction law. In the event that the parties mutually agree to use a panel of three arbitrators, then the construction attorney will be the

presiding arbitrator, one of the arbitrators will be a registered architect and the other will be a contractor, all of whom shall be neutral and independent. This Article shall not preclude the College or Contractor from instituting legal action to discharge an invalid construction lien. The arbitration hearing shall be held in Mercer County, New Jersey, at the offices of the College's attorneys, unless another location is mutually agreed upon.

A demand for arbitration shall be made no earlier than concurrently with the filing of a request for mediation, but in no event shall it be made after the date when the institution of legal or equitable proceedings based on the claim, dispute or other matter in question would be barred by the applicable statute of limitations. For statute of limitations purposes, receipt of a written demand for arbitration by the person or entity administering the arbitration shall constitute the institution of legal or equitable proceedings based on the claim, dispute or other matter in question.

The foregoing agreement to arbitrate and other agreements to arbitrate with an additional person or entity duly consented to by the parties to the Contract shall be specifically enforceable in accordance with applicable law in any court having jurisdiction thereof.

The award rendered by the arbitrator(s) shall be a reasoned award and shall include a statement of findings of fact and conclusions of law and shall be final, and judgment may be entered upon it in accordance with applicable law in any court having jurisdiction thereof.

17.4 Consolidation Or Joinder.

The College, in its sole discretion, may consolidate an arbitration conducted under the Contract with any other arbitration to which it is a party provided that (i) the arbitration agreement governing the other arbitration permits consolidation, (ii) the arbitrations to be consolidated substantially involve common questions of law or fact, and (iii) the arbitrations employ materially similar procedural rules and methods for selecting arbitrator(s).

The College, in its sole discretion, may include by joinder persons or entities substantially involved in a common question of law or fact whose presence is required if complete relief is to be accorded in arbitration, provided that the party sought to be joined consents in writing to such joinder. Consent to arbitration involving an additional person or entity shall not constitute consent to arbitration of any claim, dispute or other matter in question not described in the written consent.

The College, in its sole discretion, may grant to any person or entity made a party to an arbitration conducted under this Article, whether by joinder or consolidation, the same rights of joinder and consolidation as the College under the Contract.

17.5 Work During Pendency Of Dispute.

Unless otherwise instructed by the College, the Contractor shall carry on its Work during the pendency of any dispute hereunder, and the College shall continue making payments to the Contractor of undisputed amounts.

17.6 Prompt Payment Claims.

Notwithstanding the foregoing, disputes regarding only whether a party has failed to make payments required pursuant to New Jersey's Prompt Payment Act may be submitted to alternative dispute resolution as provided in N.J.S.A. 2A:30A-2(f). In such event, the College and the Contractor shall share equally the fees and expenses of the selected mediator. Provided, however, that nothing herein shall be construed, in whole or in part, as a waiver, release or modification of the provisions of the New Jersey Contractual Liability Act, N.J.S.A. 59:13-1, et seq., as it governs claims against the College.

17.7 The Contractor's Claims: Procedures And Limitations.

Claims by the Contractor against the College shall be subject to the New Jersey Contractual Liability Act, N.J.S.A. 59:13-1, et seq., including the notice and time for suit provisions. For the purpose of determining the time within which the Contractor must file suit under the New Jersey Contractual Liability Act, "completion of the contract" shall be deemed to have occurred upon achievement of Substantial Completion as defined in these General Conditions.

The Contractor also agrees that it shall not be entitled to assert claims against the College for any compensation beyond that provided for in the Contract by reason of the acts or omissions of any third parties, including but not limited to the Architect and any other contractor on the Project. The Contractor may not assert claims for extra costs for home offices expenses, home office overhead, lost profits or revenue, or consequential damages as that term is defined in law. All claims shall also be subject to all other pertinent provisions of the Contract for Construction and the Contract Documents including these General Conditions. The Contractor also agrees that it may not assert any claims for extra costs or damages unless it maintains all the records of its estimated and actual costs as required by the Contract for Construction and these General Conditions.

17.8 Dispute Resolution Process In The Contractor's Subcontracts.

The Contractor shall include this dispute resolution process in all of its contracts with any Subcontractors or suppliers on this Project.

ARTICLE 18
MISCELLANEOUS.

18.1 Prevailing Wage.

The Contractor and its Subcontractors shall comply with the New Jersey Prevailing Wage Act, N.J.S.A. 34:11-56.25 through 56.57. Workers employed by the Contractor or any Subcontractor or sub-subcontractor in the performance of services directly on the Project must be paid prevailing wages. As required by N.J.S.A. 34:11-56.27 and 56.28, the Contract cannot become effective until the College obtains from the New Jersey Department of Labor a determination of the prevailing wage rates applicable to the Project as of the Contract award date and attaches a copy to the Contract. As required by N.J.S.A. 34:11-56.27, the Contractor or any

Subcontractor may be terminated if any covered worker is not paid prevailing wages on the Project, and the Contractor and its surety shall be liable for any additional costs which result. The Contractor and its Subcontractors must be registered with the New Jersey Department of Labor (N.J.S.A. 34:11-56.51 et seq.), and the prevailing wage rates must be posted at the job site (N.J.S.A. 34:11-56.32). The Contractor and its Subcontractors must prepare accurate certified records of wages paid for each worker on the Project (N.J.S.A. 34:11-56.29), and copies for the period covered by each invoice must be attached to the invoice submitted under the Contract. In accordance with N.J.S.A. 34:11-56.33, the Contractor's final invoice must include a statement of all amounts still then due to workers on the Project. The Contractor is also cautioned that it must use job titles and worker classifications consistent with those approved by the Department of Labor, and that, if it intends to pay apprentice rates, it must comply with the Department of Labor's regulations at N.J.A.C. 12:60-7.1 through 7.4.

If the State's Prevailing Wage Act is amended, or the language stated herein is inconsistent with the language contained in the State's Prevailing Wage Act, the language of the State's Prevailing Wage Act shall control.

18.2 Employment Discrimination.

The Contractor and any Subcontractors employed by it shall comply with N.J.S.A. 10:2-1 through 10:2-4 and N.J.S.A. 10:5-1 et seq., including N.J.S.A. 10:5-31 through 10:5-35, which prohibit discrimination in employment in public contracts. The statute and the rules and regulations promulgated thereunder shall be considered to be part of the Contract and binding upon the Contractor and its Subcontractors. If the College is notified of any violation of the public contract awarding regulations in accordance with N.J.A.C. 17:27-7.4 concerning the financing of minority and women outreach and training programs, the College reserves the rights to deduct the outreach and training allocation from the Contract. During the performance of the Contract, the Contractor agrees that:

(a) In the hiring of persons for the performance of Work under the Contract or any subcontract hereunder, or for the procurement, manufacture, assembling or furnishing of any such materials, equipment, supplies or services to be acquired under the Contract, neither the Contractor, its Subcontractors nor any person acting on behalf of the Contractor or any of its Subcontractors, shall, by reason of race, creed, religion, color, national origin, nationality, ancestry, age, sex (including pregnancy), familial status, marital status, domestic partnership or civil union status, affectional or sexual orientation, gender identity or expression, atypical hereditary cellular or blood trait, genetic information, liability for military service, and mental or physical disability, perceived disability, and AIDS and HIV status, discriminate against any person who is qualified and available to perform the Work to which the employment relates;

(b) Neither the Contractor, its Subcontractors, nor any person acting on behalf of the Contractor or any of its Subcontractors shall, in any manner, discriminate against or intimidate any employee engaged in the performance of Work under the Contract or any subcontract hereunder, or engaged in the procurement, manufacture, assembling or furnishing of any

such materials, equipment, supplies or services to be acquired under such contract, on account of race, creed, religion, color, national origin, nationality, ancestry, age, sex (including pregnancy), familial status, marital status, domestic partnership or civil union status, affectional or sexual orientation, gender identity or expression, atypical hereditary cellular or blood trait, genetic information, liability for military service, and mental or physical disability, perceived disability, and AIDS and HIV status;

(c) There may be deducted from the amount payable to the Contractor by the College, under the Contract, a penalty of $50.00 for each person for each calendar day during which such person is discriminated against or intimidated in violation of the provisions of the Contract; and

(d) The Contract may be canceled or terminated by the College, and all money due or to become due hereunder may be forfeited, for any violation of this Article of the Contract occurring after notice to the Contractor from the College of any prior violation of this Article of the Contract. The Contractor and its Subcontractors shall comply with all laws prohibiting discrimination against employees, and shall comply with the provision in the Contract regarding employment discrimination.

If the State's Law Against Discrimination is amended, or the language stated herein is inconsistent with the language contained in the State's Law Against Discrimination, the language of the State's Law Against Discrimination shall control.

18.3 Patents.

If any design, device, material or process covered by patents or copyright is used in the Work, the Contractor shall provide for such use by a suitable agreement with the patent or copyright owner. The Contractor shall bear all costs arising from the use of patented materials, equipment, or processes and all copyrighted materials used on or incorporated in the Work. The Contractor shall defend, indemnify and hold harmless the College and its representatives from any and all claims for infringement by reason of the use of any such patented or copyrighted items.

18.4 The Contractor's Compliance With Law.

The Contractor shall keep fully informed of all federal, state and local laws, ordinances, regulations and orders of agencies that have jurisdiction or authority that in any manner affect those employed on the Project or the Project. The Contractor shall at all times observe and comply with, and cause its agents and employees to observe and comply with, all such laws, ordinances, regulations, and/or orders. The Contractor shall also protect and indemnify, defend and hold harmless the College and its representatives against any claim or liability arising from the violation of any laws, ordinances, regulations, or orders, whether by the Contractor or its employees, agents, Subcontractors at any tier, suppliers or materialmen.

18.5 Environmental Protection – The Contractor's Duty To Comply With Applicable Law.

The Contractor shall comply with all applicable federal, state and local laws and regulations and all conditions of permits pertaining to the protection of the environment. Necessary precautions shall be taken to prevent pollution of streams, lakes, ponds, rivers, wetlands, groundwater, reservoirs, and property by chemicals, fuels, oils, bitumens, or other harmful or hazardous materials as defined by law. The Contractor also shall not pollute the atmosphere from particulate or gaseous matter in violation of applicable law.

18.6 No Personal Liability Of College Officials.

In carrying out any of the provisions of the Contract, or in exercising any right or authority granted to them by or in connection with the Contract, there shall be no liability upon any trustee, officer or employee of the College, either personally or as officials of the College, it being agreed that in all such functions they act only as agents and representatives of the College.

18.7 Buy American Requirement.

Pursuant to N.J.S.A. 52:32-1 only manufactured and farm products of the United States, whenever available, shall be used in work.

Pursuant to NJ.S.A. 52:33-1 et seq., notwithstanding any inconsistent provision of any law, and unless the head of the department, or other public officer charged with the duty by law, shall determine it to be inconsistent with the public interest, or the cost to be unreasonable, only domestic materials shall be acquired or used for any public work. This Article shall not apply with respect to domestic materials to be used for any public work, if domestic materials of the class or kind to be used are not mined, produced or manufactured, as the case may be, in the United States in commercial quantities and of a satisfactory quality. If the State's "Buy American" laws are amended, or the language stated herein is inconsistent with the language contained in the State's "Buy American" laws, the language of the State's "Buy American" laws shall control.

18.8 Compliance With Grant Requirements. The Contractor acknowledges and agrees that if the College receives any grant monies in connection with the Project, the Contractor and its Subcontractors shall comply with all requirements associated with such grant or set forth in such grant agreement. Any such grant requirements shall be identified in the Request for Proposals.

18.9 Modification Of Contract.

No modification or amendment of the Contract shall be effective unless it is in writing and signed by both the College and the Contractor.

18.10 State Sales Tax Exemption.

Materials, supplies or services for exclusive use in constructing the Project are exempt from the State Sales Tax Act. Rentals of equipment are not exempt from any tax under the State Sales Tax Act.

18.11 Successors and Assigns.

The College and the Contractor respectively bind themselves, their successors and assigns, to the other party hereto and to the successors and assigns of such other party in respect to covenants, agreements and obligations contained in the Contract Documents.

The Contractor shall not assign the Contract, nor shall the Contractor transfer or assign any Contract funds, due or to become due, or claims of any nature it has against the College without the prior written approval of the College. The College in its sole discretion and considering primarily the interests of the College may elect either to grant or to deny such approval. If the Contractor attempts to make such an assignment without the College's prior written approval, the Contractor shall nevertheless remain legally responsible for all obligations under the Contract.

The College shall be entitled to assign its rights hereunder to one or more lenders as collateral for loans which the College may obtain to finance construction of the Project and to a party who presently has or later acquires a legal interest in the premises. The Contractor agrees to execute such certificates, documents and instruments as are reasonably requested by the College, including, without limitation, certificates, documents and instruments that evidence the Contractor's consent to an assignment of the Contract or confirm the absence or existence of a default on the part of the College hereunder.

18.12 Construction Liens.

If any Subcontractor or other person working under the Contractor files a construction lien or claim or notice of intention or right to file a lien for or on account of Work, labor, services, materials, equipment or other items furnished under or in connection with the Contract for which the College has paid the Contractor, the Contractor agrees to discharge or remove such lien, claim or notice at its own expense by bond, payment or otherwise within twenty (20) calendar days from the date of the filing thereof, and upon its failure to do so, the College shall have the right to cause any such lien or claim, notice of intention or stop notice to be removed or discharged by whatever means the College chooses, at the sole cost and expense of the

Contractor (such costs and expenses to include legal fees and disbursements). The Contractor agrees to indemnify, defend and hold harmless the College and its representatives from and against any and all such liens, claims or other filings, and actions brought or judgments rendered thereon, and from and against any and all losses, damages, liabilities, costs and expenses, including legal fees and disbursements, which the College may sustain in connection therewith. Further, if any Subcontractor or other person working under the Contractor files a construction lien or claim or notice of intention or right to file a lien for or on account of Work, labor, services, materials, equipment or other items furnished under or in connection with the Contract for which the College has paid the Contractor, the College may, in the College's sole discretion, pay all wages, damages, recoveries, costs and expenses and reasonable counsel fees arising therefrom and deduct the same from any monies due or to become due to the Contractor.

18.13 Independent Contractor Status.

The relationship of the Contractor to the College is that of an independent contractor. The Contractor agrees that it shall conduct itself consistent with such status, and shall not hold itself out as or claim to be a trustee, officer, employee or agent of the College. The Contractor shall not make any claim or demand for any right or privilege applicable to officers or employees of the College, including but not limited to, workers compensation, unemployment insurance benefits, social security coverage, or retirement benefits.

18.14 Third Party Beneficiary Rights Not Intended.

It is specifically agreed between the College and the Contractor that no provisions of the Contract Documents are intended to make the public or any member thereof a third party beneficiary of the Contract, or to authorize anyone not a party to the Contract to maintain a suit for personal injuries, property damage or other claims under the Contract. It is also the intent of the College and the Contractor that no individual or firm that supplies materials, labor, services, or equipment to the Contractor for the performance of the Work shall be a third party beneficiary of the Contract.

18.15 Gifts To College Employees And Agents Prohibited.

The Contractor shall not give any gifts of any nature, nor any gratuity in any form, nor loan any money or anything of value to any College employee or relative thereof, or any agent of the College. The Contractor shall not rent or purchase any equipment or supplies of any kind from any College employee or relative thereof or any agent of the College.

18.16 Compliance With Procurement Statutes.

The Contractor warrants and represents that the Contract has not been solicited or secured, directly or indirectly, in a manner contrary to the law of New Jersey, and in particular the provisions of N.J.S.A. 18A:64-6.1, 6.2 and 6.3, and that the Contractor has not and shall not violate the law of New Jersey relating to the procurement of or the performance of the Contract by any conduct, including the paying of any gratuity of any kind, directly or indirectly, to any College trustee, employee or officer. Any violation of this Article shall be cause for the College to terminate the Contract, to retain all unpaid and/or unearned monies, and to recover all monies paid. The Contractor shall notify the College in writing of any interest which any trustee, officer,

employee or consultant of the College has in, or association with the Contractor, any other contractor, any Subcontractor, material supplier, consultant, or manufacturer, or other party which has any interest in the Project.

18.17 Conflict Of Interest.

The Contractor shall not pay, offer to pay, or agree to pay, either directly or indirectly, any fee, commission, compensation, gift, gratuity, or other thing of value of any kind to any State officer or employee or special State officer or employee, as defined by N.J.S.A. 52:13D- 13b. and e., in the Department of the Treasury or any other agency with which the Contractor transacts or offers or proposes to transact business, or to any member of the immediate family, as defined by N.J.S.A. 52:13D-13i., of any such officer or employee, or any partnership, firm, or corporation with which they are employed or associated, or in which such officer or employee has an interest within the meaning of N.J.S.A. 52:13D-13g.

The solicitation of any fee, commission, compensation, gift, gratuity or other thing of value by any State officer or employee or special State officer or employee from any State vendor shall be reported in writing forthwith by the Contractor to the Attorney General and the Executive Commission on Ethical Standards.

The Contractor may not, directly or indirectly, undertake any private business, commercial or entrepreneurial relationship with, whether or not pursuant to employment, contract or other agreement, express or implied, or sell any interest in the Contractor to, any State officer or employee or special State officer or employee having any duties or responsibilities in connection with the purchase, acquisition or sale of any property or services by or to any State agency or any instrumentality thereof, or with any person, firm or entity with which he is employed or associated or in which he has an interest within the meaning of N.J.S.A.52:13D-13g. Any relationships subject to this Article shall be reported in writing forthwith to the Executive Commission on Ethical Standards, which may grant a waiver of this restriction upon application of the State officer or employee or special State officer or employee upon a finding that the present or proposed relationship does not present the potential, actuality or appearance of a conflict of interest.

The Contractor shall not influence, or attempt to influence or cause to be influenced, any State officer or employee or special State officer or employee in his official capacity in any manner which might tend to impair the objectivity or independence of judgment of said officer or employee.

The Contractor shall not cause or influence, or attempt to cause or influence, any State officer or employee or special State officer or employee to use, or attempt to use, his official position to secure unwarranted privileges or advantages for the Contractor or any other person.

The provisions cited above shall not be construed to prohibit a State officer or employee or special State officer or employee from receiving gifts from or contracting with the Contractor under the same terms and conditions as are offered or made available to members of the general public subject to any guidelines the Executive Commission on Ethical Standards may promulgate.

The Contractor shall require its Subcontractors and suppliers to comply with the requirements of this Article.

18.18 Confidential Information.

The Contractor shall maintain the confidentiality of information specifically designated as confidential by the College, unless withholding such information would violate applicable law. The Contractor shall require its Subcontractors to maintain the confidentiality of information specifically designated as confidential by the College.

18.19 Publicity.

Publicity and/or public announcements pertaining to the Project must be approved in writing by the College prior to release.

Bowman

Project Specifications

For

The College of New Jersey

Eickhoff Hall Water Heater Replacement Project

TCNJ00034718

2000 Pennington Rd. Ewing, NJ 08628

Prepared by: **Bowman** March 28, 2025

457 Oakshade Rd, Shamong, New Jersey 08088
P: 609.268.0500
bowman.com

SECTION 010100 - SUMMARY OF WORK

PART 1- GENERAL

1.01 RELATED DOCUMENTS

A. Drawings and general provisions of the specifications, including General and Supplementary Conditions and other Division 1 Specification Sections, apply to this Section.

1.02 WORK COVERED BY CONTRACT DOCUMENTS

A. The Project consists of all work noted on the drawings and in these specifications
   1. Project Location: The College of New Jersey, Ewing New Jersey
   2. Owner: The College of New Jersey, State of New Jersey

1.03 CONTRACTS

A. The project contract is between The College of New Jersey and the single prime contractor performing the work specified.
B. Definition of Extent of Contract Work: The contract documents, specifications, project drawings, manufacturer's installation handbooks, TCNJ form of agreement, and the contractors response to the RFP represent the extent of the construction contract.

1.04 CONTRACTORS USE OF PREMISES

A. General: During the construction period the Contractor shall have full use of the premises for construction operations, including use of the site. The contractor's use of the premises is limited only by the Owner's right to perform work, retain other contractors on portions of associated projects, or to access the building for the occupants.
   1. Contractor is to coordinate their work with the activities for each work location.
B. Use of the Site: Limit use of the premises to areas required for equipment and material storage and access to the roof area. Confine operations to areas within contract limits indicated. Do not disturb portions of the site beyond the areas immediately adjacent to the building where the work is being performed.
   1. Owner Occupancy: Allow for Owner occupancy and use by the public.
   2. Driveways and Entrances: Keep driveways and entrances serving the premises clear and available to the Owner, the Owner's employees, and emergency vehicles at all times. Do not use these areas for parking or storage of materials unless previously approved by the owner. Schedule deliveries to minimize space and time requirements or storage of materials and equipment on -site.
   3. Burial of Waste Materials: Disposal of organic and hazardous materials on-site either by burial or burning, will not be permitted
   4. Parking is allowed with in the construction fence only. If more parking is needed, there is additional parking provided at the colleges Carlton Avenue parking lot.

The contractor is responsible to shuttle workers back and forth as needed.

C. Use of the Existing Building: Maintain any existing building in a weathertight condition throughout the construction period. Repair damage caused by construction operations. Take all precautions necessary to protect the building, its contents, components, and systems and its occupants during the construction period.

PART 2 - PRODUCTS (NOT APPLICABLE)

PART 3 - EXECUTION (NOT APPLICABLE)

SECTION 010250 - MEASUREMENT AND PAYMENT

PART 1 - GENERAL

1.01 SCHEDULE OF VALUES

A. Each Contractor shall prepare a schedule of values in coordination with the preparation of progress schedule. Correlate line items with other administrative schedules and forms required for the work, including progress schedule, payment request form, listing of subcontractors, schedule of allowances if any, schedule of alternates if any, listing of products and principal suppliers and fabricators, and schedule of submittals. Break down principal subcontract amounts into multiple line items for each entity of work. Round off to nearest whole dollar, but with total equal to Contract Sum. Submit 4 copies of schedule of values to the Owner and Architect for review and approval.
   1. Upon Owner/Architect approval, Owner will return the Schedule of Values to the Contractor for the Contractor to submit to the bonding company for their acceptance. Payments will not be made to the Contractor until the bonding company has provided a written acceptance to the Owner.

B. The schedule of values shall be tabulated into subcontracts and trades with the Quantity, Labor, Material, and Total Cost indicated. The Schedule of Values shall include such items as bonds, insurance, allowances and alternates, punchlist/close out documents and shall enclose copies of invoices and/or cancelled checks from bonding and insurance agents.

C. Schedule of values shall be submitted on AIA Form G703 or similar form approved by the Architect and Owner.

D. Each Contractor's monthly application for payment shall be in the same schedule form, reflecting the same items from above. Unit costs shall be realistic for their part of the Work.

1.02 CHANGES IN THE WORK

A. When a change in the Work includes a category or categories of Work both added to and deducted from the Contract, the total quantities of added Work and of deleted Work shall be determined separately for each category and the appropriate unit price or net cost of the Work shall be applied to the difference between the two total quantities.

B. Unit prices shall be inclusive of all costs and shall be applied to units of measure as defined in the Specifications for each category of Work.

C. For all extra Work performed by the Contractor, the gross cost to the Owner shall include the net cost of the Work to the Contractor plus an allowance for overhead and profit not to exceed 15% of the net cost.

D. For all extra Work performed by a Subcontractor, the gross cost to the Owner shall include the net cost of the Work to the Subcontractor plus an allowance for overhead and profit not to exceed 15% of the net cost, plus the Prime Contractor's overhead and

profit not to exceed 5% of the Subcontractor's cost.

E. Net cost of extra Work shall be the actual or pro-rated cost of:
   1. Labor, including foreman, at the prevailing rate of wages, contributions and taxes.
   2. Materials entering permanently into the Work, including delivery to the site.
   3. The ownership or rental cost of construction equipment and expendable tools, pro-rated for the time necessary for the Work.
   4. Power and consumable supplies for the operation of power equipment, pro-rated for the time necessary for the Work.
   5. Insurance and Bonds.

F. Gross costs shall be net costs plus the mark up allowances described above, such mark up allowances being inclusive, of all cost of superintendence, supervision, engineering, overhead, profit, administrative and site office expenses and all other general expenses.

G. In concert with the General Conditions of the Contract, 11.5, the contractor is to immediately notify the owner if a change in work is required and there will be a change in contract value or change in the project time. This will allow the owner and design team time to review said change expeditiously in order to preserve the project schedule and to determine if the change is warranted. Contractor should not proceed with changes in the work without written approval by the Owner. Contractor is cautioned to follow these procedures.

1.03 APPLICATIONS FOR PAYMENT

A. Except as otherwise indicated, sequence of progress payments for the Contractor shall be regular, and each shall be consistent with previous applications and payments. It is recognized that certain applications involve extra requirements, including initial applications, applications at times of substantial completion, and final payment applications.

B. Payment Application Forms: Use AIA Document G702 and G703 Continuation Sheets; available from Publications Distribution Div., The American Institute of Architects, 1735 New York Ave., N.W., Washington, D.C. 20006 (also available at most local AIA chapter offices).

C. Except as otherwise indicated, complete every entry provided on the form, including notarization and execution by authorized persons. Incomplete applications will be returned by Architect and Owner without action. Entries shall match current data of schedule of values, progress schedules and reports. Listing shall include amounts of fully executed change orders issued prior to first day of the period of construction covered by application. Applications for payment shall include weekly payroll report. Contractor shall furnish to the Owner certified payroll reports for each payroll period with pay request, indicating name craft, social security number and actual hourly rate of wages paid to each workman employed on the project. A certified payroll record is defined as "a payroll record which is attested to by the employer, or corporate officer of such company, or an authorized agent of the employer." A payment request will not be

paid until the Owner receives the certified payrolls.

D. Submit one "pencil" copy of each proposed payment application to the architect and owner, for review, not less than seven days prior to formal submissions of application.

E. Submit 4 executed copies of each payment application. Transmit with a transmittal form listing attachments, and recording appropriate information related to application.

F. Breakdown may include a line item for General Conditions. General Conditions shall include the cost of general supervision, trailers, temporary utilities and other general expenses directly related to the project and not considered overhead. The general conditions item shall be billed on monthly progress payments on a percentage of work completed.

1.04 INITIAL PAYMENT APPLICATION

A. The principal administrative actions and submittals which shall precede or coincide with submittal of the Contractor's first payment application can be summarized as follows, but not necessarily by way of limitation.
   1. Listing of subcontractors and principal suppliers and fabricators.
   2. Schedule of values.
   3. Schedule of principal products.
   4. Schedule of submittals (preliminary if not final).
   5. Copies of acquired building permits and similar authorizations and licenses from governing authorities for current performance of the work.
   6. Data needed by Owner to secure related insurance coverages.
   7. Performance and Payment Bond.
   8. Insurance Certificates.

1.05 PROGRESS PAYMENTS

A. Based upon application for payments submitted to the Architect and the Owner, by the Contractor, on or about the 25th day of each month for the period ending the last day of the previous second month, and Certificate of Payment issued by the Architect and the Owner, the Owner will make progress payments on account of the Contract Sum to the Contractor as follows:
   1. On or after the 20th day of each month, the Contractor shall submit to the Architect and Owner a "pencil copy" indicating the previous payment and the proposed amounts for each line item for the current period. After review and approval or changes, the Contractor shall prepare the final billing for presentation to the Architect and Owner.
   2. Whenever any contract, the total price of which exceeds $100,000, entered into by a State college, for the construction, reconstruction, alteration or repair of any building, structure, facility or other improvement to real property, requires the withholding of payment of a percentage of the amount of the contract, the contractor may agree to the withholding of payments in the manner prescribed in

the contract, or may deposit with the State college registered book bonds, entry municipal bonds, State bonds or other appropriate bonds of the State of New Jersey, or negotiable bearer bonds or notes of any political subdivision of the State, the value of which is equal to the amount necessary to satisfy the amount that otherwise would be withheld pursuant to the terms of the contract. The nature and amount of the bonds or notes to be deposited shall be subject to approval by the State college. For purposes of this section, "value" shall mean par value or current market value, whichever is lower.

a. If the contractor agrees to the withholding of payments, the amount withheld shall be deposited, with a banking institution or savings and loan association insured by an agency of the Federal government, in an account bearing interest at the rate currently paid by such institutions or associations on time or savings deposits. The amount withheld, or the bonds or notes deposited, and any interest accruing on such bonds or notes, shall be returned to the contractor upon fulfillment of the terms of the contract relating to such withholding. Any interest accruing on cash payments withheld shall be credited to the State college.
   1) Any contract, the total price of which exceeds $100,000, entered into by a State college involving the construction, reconstruction, alteration, repair or maintenance of any building, structure, facility or other improvement to real property, shall provide for partial payments to be made at least once each month as the work progresses, unless the contractor shall agree to deposit bonds with the State college pursuant to section 1.
   2) With respect to any contract entered into by a State college pursuant to section 2 for which the contractor shall agree to the withholding of payments pursuant to section 1, 2% of the amount due on each partial payment shall be withheld by the State college pending completion of the contract.
      (a) Upon acceptance of the work performed pursuant to the contract for which the contractor has agreed to the withholding of payments pursuant to subsection a. of this section, all amounts being withheld by the State college shall be released and paid in full to the contractor within 45 days of the final acceptance date agreed upon by the contractor and the State college, without further withholding of any amounts for any purpose whatsoever, provided that the contract has been completed as indicated. If the State college requires maintenance security after acceptance of the work performed pursuant to the contract, such security shall be obtained in the form of a maintenance bond. The maintenance bond shall be no longer than two years and shall be no more than 100% of the project costs.

b. This act shall take effect immediately. This bill supplements the “State College Contracts Law,” P.L.1986, c.43 (C.18A:64-52 et seq.), and applies to any State college contract for over $100,000 which involves the construction,

reconstruction, alteration or repair of any building, structure, facility or other improvement to real property. Under the provisions of this bill, whenever a contract of this type requires the withholding of payment of a percentage of the amount of the contract, the contractor would have the choice of either agreeing to a retainage deduction from each monthly progress payment, or the contractor could choose to deposit bonds in the amount necessary to satisfy the amount that otherwise would be withheld under the contract. If a contractor chooses a retainage deduction from each monthly payment, then the retainage would be limited to 2% of the amount due on each partial payment. Upon acceptance of the work performed pursuant to the contract for which the contractor has agreed to a retainage deduction, all amounts being withheld by the State college must be paid in full to the contractor within 45 days of the final acceptance date agreed upon by the contractor and the State college. The bill provides that if the State college requires maintenance security after acceptance of the work performed under the contract, the security must be obtained in the form of a maintenance bond, which is required to be no longer than two years and no more than 100% of the project costs. The provisions of this bill are similar to provisions in the "Local Public Contracts Law," P.L.1971, c.198 (C.40A:11-1 et seq.) and the "Public School Contracts Law," P.L.1977, c.114 (C.18A:18A-1 47 et seq.).

3. Upon substantial completion, the retainage shall, upon the Architect/Owner's approval, remain at 2% of the value of work completed. Final release of retained monies will occur only upon the total completion of all punch list and closeout documentation to the satisfaction of the Architect and Owner.
4. For each day's delay in the Contractor's submission of an application for payment acceptable to the Architect and Owner, the Owner may delay one day in making his progress payment.
5. Owner shall make payments within 30 days of receipt of said monthly pay requisition.

1.06 APPLICATION AT TIME OF SUBSTANTIAL COMPLETION

A. Following issuance of certificate of substantial completion on each Contractor's work, and also in part as applicable to prior certificates on portions of completed work as designated, a "special" payment application may be prepared and submitted by Contractor. The principal administrative actions and submittals which shall precede or coincide with such special applications can be summarized as follows, but not necessarily by way of limitation:
   1. Occupancy permits and similar approvals or certifications by governing authorities and franchised services, assuring Owner's full access and use of completed work.
   2. Warranties, guarantees, maintenance agreements and similar provisions of Contract Documents.

3. Test/adjust/balance records, maintenance instructions, meter readings, start up performance reports, and similar change over information germane to Owner's occupancy, use, operation and maintenance of completed work.
4. Final cleaning of the work.
5. Application for reduction (if any) of retainage, with consent of surety.
6. Advice to Owner on coordination of shifting insurance coverages, including proof of extended coverage as required.
7. Listing of Contractor's incomplete work, recognized as exceptions to certificate of substantial completion.

1.07 FINAL PAYMENT APPLICATION

A. The administrative actions and submittals which shall precede or coincide with submittal of the Contractor's final payment application can be summarized as follows, but not necessarily by way of limitation.
   1. Completion of project closeout requirements.
   2. Completion of items specified for completion beyond time of substantial completion, regardless of whether special payment application was previously made.
   3. Assurance, satisfactory to Owner and Owner, that unsettled claims will be settled and that work not actually completed and accepted will be completed without undue delay.
   4. Transmittal of required project construction records to Owner via the Owner.
   5. Proof, satisfactory to Owner and Owner, that taxes, fees and similar obligations of Contractor have been paid.
   6. Removal of temporary facilities, services, surplus materials, rubbish and similar elements.
   7. Notarized consent of surety for final payment.

1.08 WAIVER OF LIENS

A. Each Contractor, for himself, and for all Subcontractors and material men, agrees that no mechanic's lien or other claim shall be filed or maintained by the Contractor or by any Subcontractor, materialmen, laborer or any other person whatsoever for, or on account of any work performed or materials furnished under this Contract. This agreement shall be an independent contract, and the Contractor shall execute and deliver a separate Waiver of Liens in form and substance satisfactory to the Architect and Owner contemporaneously with the execution of the Owner-Contractor Agreement and before any work is begun at the site.

B. In every subcontract entered into by each Contractor after execution of this Contract or in connection herewith, the Contractor shall incorporate a provision, similar to the foregoing paragraph, to the effect that neither the Subcontractor nor any party acting through or under him shall file or maintain any mechanic's lien or other claim against

the Architect or Owner in connection with the Work.

SECTION 011000 - PROJECT PROCEDURES

PART 1 - GENERAL

1.01 1.01 SPECIAL REQUIREMENTS

A. Schedule: Contractor shall provide a master schedule showing sequencing of work utilizing the CPM method. The Contractor shall supply a schedule with all subcontractor activities, relationships, and durations, utilizing the CPM method via SureTrak/Primavera, Version 3.0, or a Microsoft scheduling software to the Owner on a working version CDrom and coordinate their schedule with the Owner.
   1. The Contractor is required to update at the end of each month the CPM Schedule based on the percentage completed for each activity on the approved schedule (in concert with the submission of the percentage completed in the monthly proposed schedule of values).
   2. The contractor in their bid includes a cost of $500.00 per month for this schedule submission, for the duration of construction (per the milestone schedule in the bidding documents). This only applies to projects in excess of 2 million dollars in base price price. The contractors schedule of values shall include this cost, and can only be billed for upon TCNJ's successful receipt of said schedule. Should any schedule not be received at the end of any month during construction, TCNJ will issue a deduct change order in the amount of $500.00 to the contractor.

B. Each Contractor shall take all necessary precautions to ensure the safety of all structural elements during all phases of all work. No materials, cranes, trucks or any other construction loads shall be placed on any part of the structure until the Contractor has determined the adequacy of that structure to carry the intended load without damage or overstress.

C. Entrance into, or other use of the building will not be permitted except as may be necessary for the execution of the Work, and shall be subject to the restrictions and instructions of the Owner.

D. Routes of ingress and egress to areas where work is being performed shall be subject to the restrictions and instructions of the Owner.

E. Materials shall be moved through the Building using rubber tired vehicles which shall be properly controlled at all times to avoid damage to existing wall, floor or ceiling surfaces.

F. Water damage cannot be tolerated and it is incumbent upon Contractors to take any steps necessary to keep the existing premises dry at all times.

G. Any damage to the new building from heavy equipment, striking the Building or any other damage to any part of the premises shall be repaired at the expense of the Contractors.

H. All welding and cutting shall be performed by qualified and certified welders. Certificates shall be on file with the Contractor prior to commencement of any

welding.

I. No work shall start before 8:30am unless agreed to in advance with the College.

PART 2 - PRODUCTS (NOT APPLICABLE)

PART 3 - EXECUTION

3.01 GENERAL

A. Contractors shall perform the work on or about the premises in a careful manner with full consideration to fire protection as required by the National Fire Protection Association Standards, National Board of Fire Underwriters and State and Local Departments having jurisdiction. Fire resistant materials shall be used for temporary enclosures.

B. Chemical extinguishers approved by the Owner shall be provided by the General Contractor during the progress of the work where and as required by the Owner, the State Fire Marshal and the National Board of Fire Underwriters.

C. The Contractor shall maintain an active program of fire prevention to keep workmen fire conscious during the entire life of the Contract. Designate one member of the organization to execute and coordinate fire control measures of his own organization and that of all subcontractors under his jurisdiction.

D. All sub-contractors shall cooperate with the Contractor in carrying out the above program.

E. Storage of flammable materials will not be permitted in the Building unless written permission is obtained from the Owner. Storage of all such materials shall be the Contractors' responsibility.

F. On-site open burning of rubbish, garbage, trade waste, leaves or plant life is prohibited.

G. Safety Program: The Contractor shall institute a safety program in accordance with OSHA and any local, state, or federal guidelines. The contractor shall name a safety officer to monitor this program and shall submit a safety report at job meetings. Contractor is to maintain their company safety manual on site at all times, along with SDS for every material that is on site.

H. Stockpiling: Stockpiling of materials on site will be allowed (but limited due to the limited space on this site). Such materials shall not impair or impede the functioning of the facility. Materials stored on site shall be secured to prevent loss from theft, damage, vandalism or fire. By stockpiling materials on site, the contractor assumes full responsibility for said materials, and shall protect them to the fullest extent possible. Specific locations for stockpiling materials shall be coordinated with the Architect, and Owner.

I. Safety Barriers: The Contractor shall erect safety barriers to deter and prohibit unauthorized access to the construction site; such barriers may take the form of fences and shall be clearly marked with signage prohibiting unauthorized access. The

Contractor shall be responsible for safety barriers within the building. The contractor shall be liable for damages to persons or property due to the construction process if adequate safety measures are not undertaken. The Owner and Architect shall review safety precautions for their adequacy but shall not be held liable for Contractors failure to maintain or provide adequate protection.

J. Sequencing: The Contractor will work with the Sub-Contractors to sequence the work during the submission of monthly project schedules. Contractors shall endeavor to coordinate their work efforts with the Owner's requirements. Interruptions of utility services shall be coordinated with the Architect, and Owner, but in no instance shall last longer than 2 hours.

K. Limited staging and on site parking will be provided by General Contractor. The Contractor will coordinate parking areas with all the subcontractors and TCNJ.
   1. Parking will be available at Carlton Avenue. Contractor will provide shuttle service to and from the site.
   2. Contractor will be permitted to have vehicles on site with in the construction fencing only. Contractor is to provide stone in all parking areas on site to prevent the buildup of ruts and mud, thus minimizing the amount of mud leaving the site and being left behind on TCNJ roads.

L. Site Utilities: Electric power and water are available on site. Toilet facilities will be made available by the Contractor. These facilities shall remain clean by the Contractors throughout the course of the project. The Contractors shall repair and/or replace any damaged fixtures, partitions, etc. The Electrical Sub-Contractor shall tie in a temporary power panel (or panels as required) for all trades to use during construction.
   Interruption of building services shall not occur without prior consent and coordination by the Owner and Owner.
   1. Provide portable toilets for all construction personnel.

M. Construction Lighting: The Electrical Sub-Contractor shall run sufficient strings and fixtures to maintain a 50 foot-candle/sq.ft.intensity of light throughout the project areas.

N. Dumpster Location and Cleanup: The Architect and Owner shall coordinate the dumpster location with the Contractors. The Contractor shall be responsible for obtaining, maintaining, and disposing of dumpsters, and shall maintain clean work areas throughout the course of the project.
   1. Contractor is to provide adequate manpower during the entire course of the project to maintain the site in a clean, neat and professional manner. At a minimum the contractor is to clean the entire site twice per week (on different days) by picking up all debris in and around the site. Sweeping the entire building daily is required once the floor slabs are in place. Contractor is to place garbage cans on each floor minimum 3 per floor in designated locations to assist in keeping the site clean. The owner will not tolerate a building project that is not maintained in a professional manner at all times.

O. Radio/Music usage: no one is to have any loud radios/or music devices on the work site at any time. Any music must be kept to a personal level, not affecting others on site or on campus at any time.

3.02 PROGRESS MEETINGS

A. Progress Meetings shall be held bi-weekly at the job site at a regular time and day mutually agreed upon. The frequency may be changed by the Architect or Owner to reflect current conditions. The Contractors, those of his/their subcontractors concerned with current progress or with scheduling of future progress, the Architect, the Owner, and the Owner shall each be represented at these job meetings by persons familiar with the details of the work and authorized to conclude matters relative to work progress, establishment of progress schedules, etc., as may be necessary to expedite completion of the work.

B. The Contractors and his/their subcontractors attending these meetings shall present complete and definite reports as to the status of their respective work, conditions of product and equipment manufacturer, labor availability, productivity and cooperation, shipping data, time of completion, sequence of the work, safety program, and any other information bearing upon the execution of the Contract or subcontract. For the Owner's convenience the Owner will chair the meetings.

3.03 MONTHLY REPORTS

A. The Contractor is to provide TCNJ a brief monthly status report on the last working day of each month dividing the status of the project into the following categories (report must be complete in all respects, piece meal submissions will not be accepted):
   1. Project overview
   2. Financial status
   3. Updated project schedule
   4. Change order request log
   5. Submittal log
   6. RFI log
   7. Owner/Architect issues that need immediate resolution
   8. Order/delivery issues

B. The Contractor is to provide TCNJ with this monthly report, and include in their bid a cost of $500.00 per month for all projects in excess of 2 million dollars base bid price for the duration of the construction period as noted in the bidding milestone schedule. This total cost will be listed in the contractor’s schedule of values and can be billed for on a monthly basis only if said report is received in whole as noted above. Should TCNJ not receive said complete report a deduct change order will be issued to the contractor for $500.00 for that month.

SECTION 013000 - SUBMITTALS AND SUBSTITUTIONS

PART 1 – GENERAL

1.01 PROGRESS SCHEDULE / COORDINATION DRAWINGS

A. The Contractor's schedule, shall coordinate with all trades to produce a coordinated CPM via Suretrak/Primavera version 3.0 or a Microsoft scheduling program schedule indicating the start and completion dates for each portion of the work as defined by the schedule of values, with the total time as defined by the contract time and milestone dates as set forth in these specifications. The Contractor's CPM schedule shall be submitted in electronic format (Suretrak 3.0 or a Microsoft Scheduling program) to and reviewed by the Owner prior to first application for payment. Any revisions or additional information requested by the Owner or Architect shall be provided. (No payment shall be made to any Contractor not providing a schedule that reflects their entire work).
   1. Also refer to Section 01100-1 – Project Procedures.

B. The Contractor shall revise the progress schedule on a monthly basis as the work progresses reflecting therein any delays, including those not within the Contractor's control, or accelerations in the progress of the work. The progress schedule, as revised for any weekly period, shall be discussed at the bi-weekly job meetings with the, Owner, the Engineer, and the Contractor and the major trades in order to insure that the percentage of actual completion of any portion of the work as called for in the progress schedule for that bi-weekly period is attained. Monthly updates to the progress schedule shall be made prior to application for payment.

C. Should any delay occur in the progress of the work or any portion thereof, the Contractor shall be required to implement all necessary measures to accelerate the construction, to meet the percentages of completion dictated by the progress schedule on the applicable dates, without additional cost to the Owner.

1.02 SHOP DRAWINGS, PRODUCT DATA AND SAMPLES

A. Shop drawings, product data and samples will not be processed by the Owner and/or Engineer until the list of subcontractors, material suppliers and fabricators is submitted as required under Paragraph 3.12 of the General Conditions.
   1. The successful Contractor shall submit their list of proposed substitutions with in 20 calendar days of the Contract Award.
   2. The Engineer shall be compensated on an hourly basis for review of all shop drawings or samples that do not meet the requirements of the contract documents after two submissions. The compensation shall be deducted from the contractors contract via a deduct change order, or other means that both parties agree to.

B. Coordinate preparation and processing of submittals with performance of the work so that work will not be delayed by submittals. Allow two weeks for review/approval by

the Engineer for the approval process, one additional week for TCNJ staff to review the submittal before it is returned to the contractor. Allow additional time if processing must be delayed to permit coordination with subsequent submittals with others.

1. Contractor is to provide a submittal schedule identifying the critical path submittals to assist the design team in prioritizing their review and subsequent return to the contractor prior to the first requisition for payment being processed. Every submittal is to have a required return date associated with it so the design team can schedule their reviews accordingly.

C. Provide permanent marking on each submittal to identify Project, date, Contractor, subcontractor, submittal name, Specification section, drawing reference, and similar information to distinguish it from other submittals. Show Contractor's executed review and approval marking and provide space (5" x 7") for Architect's Action marking and space for Owner's review marking. Package each submittal appropriately for transmittal and handling. Submittals received, which are lacking the above information, will be returned without action. Submittals, which are received from sources other than through Contractor’s office, will be returned without action.

D. Each submission shall be complete, with all options clearly marked and with all components required for the assembly fully described and detailed. Submissions missing important information will be returned unchecked.

E. Transmittal Form: Submittals shall be accompanied by a transmittal form. Provide Contractor's certification on form, ready for execution, stating that information submitted complies with requirements of contract documents.

1. Transmit all submittals and shop drawings to the Architect or Engineer with a copy of the transmittal to the Owner.

F. Except as otherwise indicated in individual work sections, comply with requirements specified herein for each indicated category of submittal. Provide and process intermediate submittals, where required between initial and final, similar to initial submittals.

G. Maintain returned final set of samples at project site, in suitable condition and available for quality control comparisons by Engineer, and by Owner.

H. Do not proceed with installation of materials, products or systems until final copy of applicable shop drawings, product data and samples are in possession of Installer.

I. Provide newly prepared shop drawings, on reproducible sheets, with graphic information at accurate scale, with company name of preparer indicated. Show dimensions and note which are based on field measurement. Identify materials and products in the work shown. Indicate compliance with standards, and special coordination requirements. Do not allow shop drawing copies without appropriate final Action markings by Architect to be used in connection with the work.

1. Initial and Intermediate Submittals: One correctable translucent reproducible print and 5 blue line or black line prints; reproducible will be returned.

2. Final Submittal: 6 prints, plus 3 additional prints where required for maintenance manuals; 4 will be retained and remainder will be returned, one of which shall be marked up and maintained by Contractor as "Record Document".
3. Electronic submittals are acceptable in AutoCad format only. Contractor shall be responsible for printing and distribution of multiple copies as required.

J. Collect required product data into one submittal for each unit of work or system; and mark each copy to show which choices and options are applicable to the project. Include manufacturer's standard printed recommendations for application and use, compliance with standards, application of labels and seals, notation of field measurements that have been checked, and special coordination requirements. Maintain one set of product data for each submittal at project site, available for reference by Architect and others.

K. Submittals will be accepted from the Contractor only. Submittals received from other entities will be returned without review or action.
1. Submittals received without a transmittal form will be returned without review or action.
2. Transmittal form: Use a form matching the sample form attached to this section. Include the following:
   a. List of deviations.
   b. The Contractor's certification signature.
3. Fill out a separate transmittal form for each submittal; also include the following:
   a. Other relevant information.
   b. Request for additional information.

L. Do not submit product data, or allow its use on the project, until compliance with requirements of Contract Documents has been confirmed by Contractor. Submittal is for information and record unless otherwise indicated. Initial submittal is final submittal unless returned promptly by Architect marked with an Action that indicates and observed noncompliance. Submit 6 copies, plus 3 additional copies, which will be returned, where required for maintenance manuals.
1. Electronic submittals are acceptable in 8 ½” x 11” format only.

M. Provide three (3) samples identical with final condition of proposed materials or products for the work. Include range samples, not less than 3 units, where unavoidable variations between units of each set. Provide full set of optional samples where Architect's selection is required. Prepare samples to match Architect's sample where so indicated. Include information with sample to show generic description, source or products name and manufacturer, limitations, and compliance with standards. Samples are submitted for review and confirmation of color, pattern, texture and kind by Architect. Architect will not test samples, except as otherwise indicated, for compliance with other requirements, which are therefore the exclusive responsibility of the Contractor.

N. Upon receipt of a signed copy of the Architects' Waiver form, electronic copies of CAD drawings of the Contract Documents will be provided by the Architect for Contractor's use in preparing submittals. Copy of Waiver form is attached.

O. Product Selection Procedures: Procedures for product selection include the following:
   1. Product: Where Specification paragraphs or subparagraphs titled "Product" name a single product and manufacturer, provide the named product or an equivalent.
   2. Manufacturer/Source: Where Specification paragraphs or subparagraphs titled "Manufacturer" or "Source" name single manufacturers or sources, provide a product of the manufacturer or source that complies with requirements, or an equivalent.
   3. Products: Where Specification paragraphs or subparagraphs titled "Products" introduce a list of names of both products and manufacturers, provide one of the products listed that complies with requirements, or an equivalent. Comply with provisions of "Product Options and Substitutions," Section 1.4 of Division 1300 of these specifications when submitting an equivalent product.
   4. Manufacturers: Where specification paragraphs or subparagraphs titled "Manufacturers" introduce a list of manufacturers' names, provide a product by one of the manufacturers listed, or an equivalent, that complies with requirements. Comply with provisions of "Product Options and Substitutions," Section 1.4 of Division 1300 of these specifications when submitting an equivalent product.
   5. Product Options: Where Specification paragraphs or subparagraphs refer to "Product Options and Substitutions," indicate that size, profiles, and dimensional requirements on Drawings are based on a specific product or system; provide the specific product or system or an equivalent product or system by another manufacturer. Comply with provisions of "Product Options and Substitutions," Section 1.4 of Division 1300 of these specifications when submitting an equivalent product.
   6. Basis of Design Products: Where Specification paragraphs or subparagraphs titled "Basis-of-Design Products" introduce or refer to a list of manufacturers' names, provide either the specified product or an equivalent. Drawings and Specifications indicate sizes, profiles, dimensions and other characteristics that are based on the product names. Comply with the provisions of "Product Options and Substitutions," Section 1.4 of Division 1300 of these specifications when submitting an equivalent product.

1.03 MISCELLANEOUS SUBMITTALS

A. Miscellaneous submittals related directly to the work include warranties, maintenance agreements, workmanship bonds, survey data and reports, physical work records, quality testing and certifying reports, copies of industry standards, record drawings, field measurement data, operating and maintenance materials, overrun stock, and similar information, devices and materials applicable to the work and not processed as

shop drawings, product data or samples.

B. Refer to sections for specific general requirements on warranties, product/workmanship bonds, and maintenance agreements. In addition to copies desired for Contractor's use, furnish 2 executed copies, except furnish 3 additional copies where required for maintenance manuals.

C. For the Owner's records, submit copies of permits, licenses, certifications, inspection reports, releases, jurisdictional settlements, notices, receipts for fee payments, judgments, and similar documents, correspondence and records established in conjunction with compliance with standards and regulations bearing upon performance of the work.

1.04 PRODUCT OPTIONS AND SUBSTITUTIONS

A. DEFINITIONS

1. Products: Items purchased for incorporating into the Work, whether purchased for Project or taken from previously purchased stock. The term "product" includes the terms "material," "equipment," "system," and terms of similar intent.
   a. Named Products: Items identified by manufacturer's product name, including make or model number or other designation, shown or listed in manufacturer's published product literature, that is current as of date of the Contract Documents.
   b. New Products: Items that have not previously been incorporated into another project or facility, except that products consisting of recycled-content materials are allowed, unless explicitly stated otherwise. Products salvaged or recycled from other projects are not considered new products.
   c. Equivalent Product: Product that is demonstrated and approved through submittal process, or where indicated as a product substitution, to have the indicated qualities related to type, function, dimension, in-service performance, physical properties, appearance, and other characteristics that equal or exceed those of specified product.
2. Substitutions: Changes in products, materials, equipment, and methods of construction from those required by the Contract Documents and proposed by Contractor.
3. Basis-of-Design Product Specification: Where a specific manufacturer's product is named and accompanied by the words "basis of design," including make or model number or other designation, to establish the significant qualities related to type, function, dimension, in-service performance, physical properties, appearance, and other characteristics for purposes of evaluating comparable products of other named manufacturers.
4. Manufacturer's Warranty: Preprinted written warranty published by individual manufacturer for a particular product and specifically endorsed by manufacturer to Owner.

5. Special Warranty: Written warranty required by or incorporated into the Contract Documents, either to extend time limit provided by manufacturer's warranty or to provide more rights for Owner.
6. Buy American Requirement: the Contractor shall comply with N.J.S.A 52:32-1 and N.J.S.A. 52:33-1 et seq., which prohibits the use by the Contractor or subcontractors of materials or farm products produced and manufactured outside of the United States on any public work.

B. General Requirements:
1. The requirements for substitutions do not apply to specified Contractor options on products and construction methods. Revisions to Contract Documents, where requested by Owner or Architect are changes, not substitutions. Contractor's determination of and compliance with governing regulations and orders issued by governing authorities do not constitute substitutions and do not constitute a basis for change orders. Otherwise, Contractor's requests for changes in products, materials, and methods of construction required by Contract Documents are considered requests for substitutions, and are subject to requirements hereto.
2. To the greatest extent possible, provide products, materials and equipment of a singular generic kind and from a single source.
3. Where more than one choice is available as options for Contractor's selection of a product or material, select an option that is compatible with other products and materials already selected. Total compatibility among options is not assured by limitations within Contract Documents, but shall be provided by Contractor. Compatibility is a basic general requirement of product/material selections.

C. Submittals: Submit 6 copies, utilizing Substitution Request Form, CSI Form 13.1.A, fully identified for product or method being requested for substitution, including related specification section and drawing numbers, and fully documented to show compliance with requirements for substitutions. Include product data/drawings, description of methods, samples where applicable, Contractor's details comparison of significant qualities between specified item and proposed substitution, statement of effect on construction time and coordination with other affected work and contractors, cost information or proposal, warranty information, compatibility with other work, approval of all authorities having jurisdiction, and Contractor's statement to the effect that proposed substitution will result in overall work equal to or better than work originally indicated.

D. Contractor's options for selecting products are limited by Contract Documents requirements, and governing regulations. Required procedures include, but are not necessarily limited to, the following for various indicated methods or specifying:
1. Single product/manufacturer name; provide product indicated or equivalent, except advise Architect before proceeding, where known that named product is not a feasible or acceptable selection.

2. Two or more product/manufacturer names; provide one of the named products or equivalent, at Contractor's option; but excluding products which do not comply with requirements. Advise Architect before proceeding.
3. Equivalent; where named products in Specifications text are accompanied by the term "or equivalent", or other language of similar effect, comply with those Contract Documents provisions concerning substitutions for obtaining Architect's approval of equivalent product.
4. Named, except as otherwise indicated, is defined to mean manufacturer's name for product, as recorded in published product literature, of latest issue as of date of Contract Documents. Refer requests to use products of a later or earlier model to Architect for acceptance before proceeding.
5. Where compliance with an imposed standard, code or regulation is required, selection from among products that comply with requirements including those standards, codes and regulations, is Contractor's option.
6. Provide products which comply with specific performances indicated, and which are recommended by manufacturer, in published product literature or by individual certification, for application indicated. Overall performance of a product is implied where product is specified for specific performance.
7. Provide products that have been produced in accordance with prescriptive requirements, using specified ingredients and components, and complying with specified requirements for mixing, fabricating, curing, finishing, testing and similar operations in manufacturing process.
8. Where matching of an established sample is required, final judgment of whether a product proposed by Contractor matches sample satisfactorily is Architect's judgment. Where no product within specified cost category is available, which matches sample satisfactorily and complies with requirements, comply with Contract Document provisions concerning substitutions for selection of a matching product outside established cost category or not complying with requirements.
9. Where specified product requirements include "...as selected from manufacturer's full range of colors, patterns, textures..." or words of similar effect, the selection of manufacturer and basic product data is to comply with requirements of the Contract, and selection shall be from the full range of products within the requirements. Where specified product requirements include "... as the industry...", or words to that effect, selection of product complying with requirements, is Architect's selection, including designation of manufacturer, where necessary to obtain desired color, pattern or texture.

E. Substitutions may be permitted by the Architect, if, in his opinion, the requirements of the proposed substitution comply with the requirements specified for the material, article or piece of equipment; however, the Architect is not required to permit substitution pursuant to the case of Whitten Corporation vs. Paddock, Incorporated,

United States District Court, Massachusetts, April 12, 1974, affirmed by the Federal First Circuit Court, December 14, 1974.

F. After award of contract, the Contractor may submit substitutes to the Architect for review, fully documented and certified, and accompanied by a proposal for a reduction in the Contract Sum.

G. Contractor's request for substitution will be received and considered when extensive revisions to Contract Documents are not required and changes are in keeping with general intent of Contract Documents; when timely, fully documented and properly submitted; and when one or more of following conditions is satisfied, all as judged by Architect. Otherwise, requests will be returned without action except to record noncompliance with these requirements.
   1. Where request is directly related to an "equivalent" clause or other language of same effect in Contract Documents.
   2. Where required product, material or method cannot be provided within Contract Time, but not as a result of Contractor's failure to pursue the work promptly or coordinate various activities properly.
   3. Where required product, material or method cannot be provided in a manner which is compatible with other materials of the work, or cannot be properly coordinated therewith, or cannot be warranted (guaranteed) as required, or cannot be used without adversely affecting Owner's insurance coverage on completed work, or will encounter other substantial noncompliances which are not possible to otherwise overcome except by making requested substitution, which Contractor thereby certifies to overcome such incompatibility, uncoordination, nonwarranty, noninsurability or other noncompliance as claimed.
   4. Where substantial advantage is offered Owner, in terms of cost, time or other valuable considerations, after deducting offsetting responsibilities Owner may be required to bear, including additional compensation to Architect for redesign and evaluation services, increased cost of other work by Owner or separate Contractors, and similar considerations.

H. Contractor's submittal of, and Architect's acceptance of, shop drawings, product data or samples which indicate work not complying with requirements of Contract Documents, does not constitute an acceptable and valid request for, nor approval of, a substitution.

I. QUALITY ASSURANCE
   1. Compatibility of Options: If Contractor is given option of selecting between two or more products for use on Project, product selected shall be compatible with products previously selected, even if previously selected products were also options.
      a. Each contractor is responsible for providing products and construction methods compatible with products and construction methods of other contractors.

b. If a dispute arises between contractors over concurrently selectable but incompatible products, Architect will determine which products shall be used.

J. EQUIVALENT PRODUCTS

1. Where products or manufacturers are specified by name, Contractor must submit the following, in addition to other required submittals, to obtain approval of an unnamed product proposed as an equivalent:
   a. Evidence that the proposed product does not require extensive revisions to the Contract Documents, that it is consistent with the Contract Documents and will produce the indicated results, and that it is compatible with other portions of the Work.
   b. Detailed comparison of significant qualities of proposed product with those named in the specifications. Significant qualities include attributes such as performance, weight, size, durability, visual effect, and specific features and requirements indicated.
   c. Evidence that proposed product provides specified warranty.
   d. List of similar installations for completed projects with project names and addresses and names and addresses of architects and owners, if requested.
   e. Samples, if requested.

1.05 OPERATION AND MAINTENANCE INSTRUCTIONS AND EQUIPMENT WARRANTIES

A. The Contractor shall orient and instruct the responsible maintenance personnel designated by the Owner in the Operation of all equipment and shall provide the maintenance personnel with pertinent literature and operational manuals for all equipment. Date and time of demonstrations shall be mutually agreed upon with the Owner. Provide qualified personnel for as long as necessary to fully orient and instruct the Owner. Contractor shall videotape instruction session and provide owner with completed video.

B. The manuals shall be submitted in (quadruplicate) 3-ring loose-leaf type binders and electronically in PDF format and be able to be TEXT SEARCHABLE to the Architect for approval with all additional information that the Architect may request and considers necessary for the proper servicing and maintenance of all equipment. Manuals are to include plain paper copies of approved shop drawings and catalog cuts. The quality of the copies may be subject to approval by the Architect. Upon completion and approval, 3 copies will be forwarded to the Owner and one copy retained by the Architect.

C. Manuals shall include no less than the following:

1. Operating Procedures:
   a. Typewritten procedures indicating each mode of operation of each piece of equipment or system. Procedures shall indicate the status of each component of a system in each operating mode.

b. Procedures shall indicate names, symbol numbers, valve tags, circuit numbers, schematic control and wiring diagrams, locations of thermostats, manual starters, control cabinets, and other controls of each system.
c. Emergency shutdown procedures for each piece of equipment or system, both automatic and manual as appropriate.

2. Maintenance Schedule: Typewritten schedule describing manufacturer's recommended schedule of maintenance and maintenance procedures.
3. Catalog cuts and shop drawings:
   a. Catalog cuts shall clearly indicate the exact model and type of each piece of equipment installed in the Project, including all options provided.
   b. Catalog cuts shall fully describe equipment including physical, electrical, mechanical and other characteristics, performance characteristics and installation or erection diagrams.
   c. Catalog cuts shall indicate spare part numbers and name, address and telephone number of local representative or service department.
4. Typewritten list of all subcontractors on the Project including name, address, telephone number and responsibility on the Project.
5. Manuals shall be indexed with dividers indicating each system or piece of equipment.
6. Warranties, permits, inspection stickers/approvals and Certificate of Occupancy are to be included.

D. Required equipment warranties shall be submitted in three copies and electronically in PDF format to the Architect.
E. The Contractor shall video tape all instructional sessions and demonstrations and provide the Owner with a copy of the videotape at the end of all demonstrations.

PART 2 - PRODUCTS (NOT APPLICABLE)

PART 3 - EXECUTION

3.01 ACTION ON SUBMITTALS

A. One copy of all submissions will be returned to the Contractor for his files. The Contractor shall mark up other copies so as to conform with the copy returned to him and forward them to all interested Contractors, Subcontractors, and Suppliers.
B. The Engineer will review and stamp submitted shop drawings in one of the following ways (the actual stamp may be different; below language is shown for an example only)
   1. "No Exceptions Taken": Approved.
   2. "Make Corrections Noted": Approved, provided the work complies with corrections marked on the submittal.
   3. "Revise and Resubmit": Do not commence work of this submittal. Revise and resubmit or prepare a new submittal; comply with notations marked on submittal.

4. "Rejected": Fundamentally not in compliance. Prepare a new submittal. No notations or comments made.

C. Work shall be executed in accordance with "Approved", "Approved As Noted", or "Resubmit for Record" stamp only.

D. Engineer's review of shop drawings/submittals will constitute checking for general arrangement only, and shall not relieve the Contractor of responsibility for complete compliance with Drawings and Specifications. Contractor shall be responsible for quantities and dimensions to assure a proper fit under field conditions.

3.02 DISTRIBUTION

A. Provide additional distribution of submittals, not included in foregoing copy submittal requirements, to subcontractors, suppliers, fabricators, installers, governing authorities and others as necessary for proper performance of the work. Include such additional copies in transmittal to Architect where required to receive Action marking before final distribution. Show such distributions on transmittal forms.

3.03 COLOR SELECTIONS

A. All colors for all finished surfaces and materials will be selected or approved by the Owner. The color selections will be made at one time to provide a complete and coordinated color schedule which, upon acceptance of the Owner, will be provided to the Contractor. Any and all specific color selections for materials not noted on drawings or in specification shall be chosen by Architect after submittal of samples.

B. It is imperative that all color information be submitted to the Architect by the Contractor before color selections can be made. If any color selection information is not available when colors are needed to meet the project schedule, the Architect will select colors from one of the named manufacturers in the Specifications, and the Contractor will be required to exactly match that color. A claim for delay will not be accepted if the color schedule is late due to the failure of the Contractor to provide the Architect with all required color information, nor will an extra be entertained if the selected color is not available from the manufacturer the Contractor intended to use but neglected to submit.

C. The Contractors are reminded of the requirement to declare all substitutions within 20 days of execution of their Contract as specified.

SECTION 013100 - QUALITY CONTROL

PART 1 - GENERAL

1.01 TRADESMEN AND WORKMANSHIP

A. Each Contractor shall ensure that tradesmen performing work at site are skilled and knowledgeable in methods and craftsmanship needed to produce required quality levels for workmanship in completed work. Remove and replace work which does not comply with workmanship standards as specified and as recognized in the construction industry for applications indicated. Remove and replace other work damaged or deteriorated by faulty workmanship or its replacement.

B. In certain instances, specification text requires that specific work be assigned to specialists or expert entities, who shall be engaged for performance of those units of work. These shall be recognized as special requirements over which Contractor has no choice or option. These assignments shall not be confused with, and are not intended to interfere with, normal application of regulations, union jurisdictions and similar conventions. One purpose of such assignments is to establish which party or entity involved in a specific unit of work is recognized as "expert" for indicated construction processes or operations. Nevertheless, final responsibility for fulfillment of entire set of requirements remains with Contractor.

1.02 INSPECTION, TESTS AND REPORTS

A. Required inspection and testing services are intended to assist in determination of probable compliances of the work with requirements, but do not relieve any Contractor of responsibility for those compliances, or for general fulfillment of requirements of Contract Documents. Specified inspections and tests are not intended to limit any Contractor's quality control program. Afford reasonable access to agencies performing tests and inspections.

B. Contractors are responsible for all testing associated with their work (foundations, soils compaction, concrete, steel, roof material testing etc.) and shall submit the name of their proposed testing agency within 15 days of Notice-to-Proceed. Each Contractor is responsible to coordinate the activities of the testing agency to assure that work is tested prior to being covered up or other activities associated to the work begin.

PART 2 - PRODUCTS (NOT APPLICABLE)

PART 3 - EXECUTION

3.01 REPLACEMENT OF WORK

A. The Contractor shall, within 24 hours after rejection of Work, remove all materials and equipment so rejected and immediately replace said Work, at his cost, to the satisfaction of the Architect. Should the Work of the Owner or other Contractors be

damaged by such removal or replacement, the Contractor shall reimburse the Owner or other Contractors for all cost incurred for correcting said damage.

3.02 EXAMINATION

A. Existing Conditions: The existence and location of site improvements, utilities, and other construction indicated as existing are not guaranteed. Before beginning work, investigate and verify the existence and location of mechanical and electrical systems and other construction affecting the Work.
   1. Before construction, verify the location and points of connection of utility services.
B. Existing Utilities: The existence and location of underground and other utilities and construction indicated as existing are not guaranteed. Before beginning sitework, investigate and verify the existence and location of underground utilities and other construction affecting the Work.
   1. Before construction, verify the location and invert elevation at points of connection of sanitary sewer, storm sewer, and water-service piping; and underground electrical services.
   2. Furnish location data for work related to Project that must be performed by public utilities serving Project site.
C. Acceptance of Conditions prior to work starting: Examine substrates, areas, and conditions, with Installer or Applicator present where indicated, for compliance with requirements for installation tolerances and other conditions affecting performance. Record observations.
   1. Written Report: Where a written report listing conditions detrimental to performance of the Work is required by other Sections, include the following:
      a. Description of the Work.
      b. List of detrimental conditions, including substrates.
      c. List of unacceptable installation tolerances.
      d. Recommended corrections.
   2. Verify compatibility with and suitability of substrates, including compatibility with existing finishes or primers.
   3. Examine roughing-in for mechanical and electrical systems to verify actual locations of connections before equipment and fixture installation.
   4. Examine walls, floors, and roofs for suitable conditions where products and systems are to be installed.
   5. Proceed with installation only after unsatisfactory conditions have been corrected. Proceeding with the Work indicates acceptance of surfaces and conditions.

3.03 PREPARATION

A. Existing Utility Information: Furnish information to local utility and Owner that is necessary to adjust, move, or relocate existing utility structures, utility poles, lines,

services, or other utility appurtenances located in or affected by construction. Coordinate with authorities having jurisdiction.

B. Existing Utility Interruptions: Do not interrupt utilities serving facilities occupied by Owner or others unless permitted under the following conditions and then only after arranging to provide temporary utility services according to requirements indicated:
   1. Notify Owner not less than two days in advance of proposed utility interruptions.
   2. Do not proceed with utility interruptions without Owner's/Owner's written permission.

C. Field Measurements: Take field measurements as required to fit the Work properly. Recheck measurements before installing each product. Where portions of the Work are indicated to fit to other construction, verify dimensions of other construction by field measurements before fabrication. Coordinate fabrication schedule with construction progress to avoid delaying the Work.

D. Space Requirements: Verify space requirements and dimensions of items shown diagrammatically on Drawings.

E. Review of Contract Documents and Field Conditions: Immediately on discovery of the need for clarification of the Contract Documents, submit a request for information to Architect. Include a detailed description of problem encountered, together with recommendations for changing the Contract Documents.

3.04 CONSTRUCTION LAYOUT

A. Verification: Before proceeding to lay out the Work, verify layout information shown on Drawings, in relation to existing conditions and dimensions. If discrepancies are discovered, notify Architect and Owner promptly.

3.05 INSTALLATION

A. General: Locate the Work and components of the Work accurately, in correct alignment and elevation, as indicated.
   1. Make vertical work plumb and make horizontal work level.
   2. Where space is limited, install components to maximize space available for maintenance and ease of removal for replacement.

B. Comply with manufacturer's written instructions and recommendations for installing products in applications indicated.

C. Install products at the time and under conditions that will ensure the best possible results. Maintain conditions required for product performance until Substantial Completion.

D. Conduct construction operations so no part of the Work is subjected to damaging operations or loading in excess of that expected during normal conditions of occupancy.

E. Tools and Equipment: Only use the best quality tools and equipment with proper attenuations for the latest acceptable sound levels.

F. Anchors and Fasteners: Provide anchors and fasteners as required to anchor each component securely in place, accurately located and aligned with other portions of the Work.
   1. Mounting Heights: Where mounting heights are not indicated, mount components at heights directed by Architect.
   2. Allow for building movement, including thermal expansion and contraction.

G. Joints: Make joints of uniform width. Where joint locations in exposed work are not indicated, arrange joints for the best visual effect. Fit exposed connections together to form hairline joints.
   1. Hazardous Materials: Use products, cleaners, and installation materials that are not considered hazardous.

SECTION 013200 - TEMPORARY FACILITIES

PART 1 - GENERAL

1.01 DESCRIPTION OF REQUIREMENTS

A. Specific administrative and procedural minimum actions are specified in this section, as extensions of provisions in General Conditions and other Contract Documents. Nothing in this section is intended to limit types and amounts of temporary work required, and no omission from this section will be recognized as an indication that such temporary activity is not required for successful completion of the work and compliance with requirements of Contract Documents.

B. Each Contractor is specifically assigned certain responsibilities for temporary facilities to be used by all Contractors, other entities at the site, the Owner's work forces and other personnel including occupants of the project, the Owner, the Architect, test agencies, personnel of governing authorities, and similar entities and personnel authorized to be at the project site during construction. In general, each Contractor is assigned the responsibilities for installation, operation and removal of each temporary facility which is related by recognized trades to its scope of contract work; and, except as otherwise indicated, each is responsible for costs and use charges associated therewith, including fuel, power usage, water usage and similar usage costs. The Contractor is responsible for temporary facilities not related to any other Contractor's scope of contract work and not otherwise specifically assigned, as designated by the Architect.

C. No costs or usage charges for temporary facilities are chargeable to the Owner, nor can any Contractor's cost or usage charges for temporary facilities be accepted as the basis for a change order extra. The total costs and usage charges for temporary facilities are included, collectively, in the Contract Amounts.

1.02 GENERAL REQUIREMENTS

A. Each Contractor shall provide and operate all hoists, cranes, helicopters and furnish and erect all ladders and scaffolding required by him and his subcontractors, constructed to afford proper protection to craftsmen, their Work and other Work in progress and previously executed.

1.03 JOB CONDITIONS

A. Each Contractor shall establish and initiate use of each temporary facility at time first reasonably required for proper performance of the total work of project. Terminate use and remove facilities at earliest reasonable time, when no longer needed or when permanent facilities have, with authorized use, replaced the need.

B. Each Contractor shall install, operate, maintain and protect temporary facilities in a manner and at locations that will be safe, nonhazardous, sanitary, protective of persons

and property, and free of deleterious effects.

1.04 ENVIRONMENTAL PROTECTION

A. Each Contractor shall provide facilities, establish procedures, and conduct construction activities in a manner that will ensure compliance with environmental and other regulations controlling construction activities at project site. The Contractor shall designate one person, the Construction Superintendent or other, to enforce strict discipline on activities related to generation of wastes, pollution of air/water/soil, generation of noise, and similar harmful or deleterious effects which might violate regulations or reasonably irritate persons at or in vicinity of project site. Anti-pollution measures required by D.E.P., as applicable are to be followed.

1.05 SECURITY

A. The Contractor shall maintain complete security on the site at all times during and outside of normal working hours to protect the Work and all field offices, and to secure the area of construction by restricting all trespassers.
   1. This means locking the doors and/or gates. A guard is not required.

B. Provide a six foot chain link fence around any compounds and/or dumpsters related to this project.

1.06 TEMPORARY CONSTRUCTION FACILITIES

A. Where mud, snow, ice or other hazardous conditions exist in the purview (Scope of Work) of any Sub Contractor, the Contractor shall remove the hazards immediately and replace with suitable material for the other contractors use. If the Owner is compelled to remove the hazards with their own forces due to inaction by the Contractor, then that Contractor will be back-charged for the work performed by the Owner.

B. No welding, cutting by torch, or Work utilizing or causing flammable waste shall be done unless adequate fire protection is provided and maintained for the duration of the Work in the area of operations.

C. Contractor is to provide road safety and traffic controls when working on or near any roadway or sidewalk on campus. Including flag personnel, signage, cones and all necessary safety measures to assure the safety of the pedestrians and vehicles at all times. This includes escorting deliveries using equipment other than a truck or car on roadways and walkways with a flag person. Backhoes can be run without an escort.

1.07 DEBRIS CONTROL (REFER TO SECTION 01524 FOR FURTHER DELINEATION)

A. The Contractor shall be responsible for daily cleaning up of spillages and debris resulting from his operations and from those of his Subcontractors; and shall be responsible for complete removal and disposition of hazardous and toxic waste materials. The Contractor shall provide containers at grade, sufficient for the depositing

of nonhazardous/nontoxic waste materials, and shall remove such waste materials from project site at least weekly during cold weather (daily high temperatures below 50 F) and at least twice weekly during mild and warm weather.

1. Contractor is responsible to provide and pay for all dumpsters.

B. The Contractor shall daily clean all mud, dirt and debris resulting from all trades operations from the adjacent streets, sidewalks, drives and parking areas and shall repair all damage caused by the cleaning to the satisfaction of the Owner.

C. The Contractor is to provide and maintain appropriate means of trash disposal (i.e., chutes) to grade/dumpster. Multiple units may be required and shall be figured for in the bid.

PART 2 - EXECUTION

2.01 ENCLOSURES

A. At earliest possible date, the Contractor shall secure project area against unauthorized entrance at times when personnel are not working. Provide secure temporary enclosure at ground floor and other locations of possible entry, with locked entrances.

B. Where any form of demolition will expose the interior of the building to weather, demolition shall follow the erection of weatherproof walls by the Contractor installed inside the demolition line, sealed and flashed, as required, to keep all water from the building interior. Keep temporary weatherproofing in place until new construction has been completed to the stage where water will not enter the building.

C. The Contractor shall provide constant protection against rain, wind, storms, frost or heat to maintain the work, materials, apparatus and fixtures free from damage. At the end of each day's work, cover work likely to be damaged. During cold weather, protect work from damage by freezing and provide such enclosures and heating apparatus as may be necessary diligently to prosecute the Work without stoppage for reason of unfavorable weather.

D. Wherever a Contractor provides openings through walls or slabs, each location shall be adequately protected at the end of each working day with temporary enclosures to make these areas tight. Openings through exterior walls shall be watertight.

E. Install an 8 foot high fence around the entire site with wind screening. Provide gates as needed to properly access the site to complete the work. Remove the fence once the project is substantially completed. Fence is to have poles into the ground where the fence will be untouched per a period of time, and can have feet with sand bags in areas that the fence may have to be moved occasionally to not interfere with the work.

F. For renovation projects: Contractor is to maintain the building in a water tight condition during all construction activities by whatever means necessary. Contractor is to never do any more removal work during any given day than that contractor can replace in the same day in order to make sure the occupants of the building will be protected from the possibility of water leakage into the building. Should any leakage occur, the contractor

is to immediately make the building water tight (on a 24 hour basis) and repair any damage caused by the leakage or replace any equipment damaged by the leakage.

2.02 TEMPORARY ELECTRICITY

A. Power is available on site.

2.03 TEMPORARY VENTILATION

A. A trade requiring ventilation for Work shall provide fans to induce circulation of air.

2.04 TEMPORARY TELEPHONES

A. Each Contractor is responsible for their own telephone service and for payment of all charges relating to that service.

2.05 TEMPORARY WATER

1. Water is available on site.

2.06 TEMPORARY SANITARY FACILITIES

A. Starting at time of start of work at project site, the Contractor shall provide and maintain self-contained toilet units of type acceptable to governing authorities, adequate, at all stages of construction, for use of personnel at project site. Provide separate facilities for male and female personnel when both sexes are working, in any capacity, at project site. Facilities shall remain in use until completion of project. Use of permanent facilities will not be permitted.

2.07 REMOVAL AND RESTORATION

A. Prior to acceptance of the Project, each contractor shall remove temporary work for which he has been responsible.

2.08 OWNER'S RIGHTS

A. If any Contractor fails to carry out his responsibilities in providing temporary facilities, as set forth above, the Owner shall have the right to take such action as he deems proper for the protection and conduct of the Work, and to deduct the cost thereof from the amount due the Contractor at fault.

B. Extended work days, hours, shifts, weekend work, etc. may be allowed upon coordination and approval by Architect, Owner at no additional cost to the Owner.

1. Should the schedule begin to slip, for any reason, each contractor will be required to work additional shifts or weekends to recover the lost time. Should there be a cost to the College for this overtime work, the contractor will be required to reimburse the owner for said costs.

2.09 PARKING

A. Parking is allowed for two vehicles only. All other parking is to be at the TCNJ Carlton Avenue parking lot. The contractor is responsible to shuttle workers back and forth as needed.

SECTION 013220 - PHOTOGRAPHIC DOCUMENTATION

PART 1 – GENERAL

1.01 RELATED DOCUMENTS

A. Drawings and general provisions of the Contract, including General and Supplementary Conditions and other Division 1 Specification Sections, apply to this Section.

1.02 SUMMARY

A. This Section includes administrative and procedural requirements for the following work by the General Contractor (other primes are encouraged to document the site and construction, but not required):
   1. Preconstruction video or photographs
B. Related Sections include the following:
   1. All of Division 1.

1.03 SUBMITTALS

A. Qualification Data: For photographer.
B. Videotapes: video the existing conditions prior to start of the project and provide TCNJ with a copy of the video.

1.04 QUALITY ASSURANCE

A. Job Project Manager or Superintendent

1.05 USAGE RIGHTS

A. Obtain and transfer copyright usage rights to the Owner for unlimited reproduction of photographic documentation.

PART 2 – PRODUCTS

2.01 PHOTOGRAPHIC MEDIA

A. Digital format as agreed to at the project kick off meeting.

PART 3 – EXECUTION

3.01 CONSTRUCTION VIDEOTAPES

A. Preconstruction: Before starting demolition or construction record, videotape (digital) of Project site, interior and exterior.
   1. Show protection efforts by the Contractor.
   2. Show as many existing conditions as possible prior to the start of the work

SECTION 013300 - CONTRACT CLOSEOUT

PART 1 – GENERAL

1.01 DEFINITION

A. Closeout is hereby defined to include general requirements near end of Contract Time, in preparation for final acceptance, final payment, normal termination of Contract, occupancy by Owner and similar actions evidencing completion of the work. Specific requirements for individual units of work are specified in sections of Divisions 2 through 16. Time of closeout is directly related to Substantial Completion, and therefore may be either a single time period for entire work or a series of time periods for individual parts of the work which have been certified as substantially complete at different dates. That time variation, if any, shall be applicable to other provisions of this section.

B. Substantial completion shall be defined that every material item has been installed. Nothing is missing and therefore, the punch list can begin.

1.02 PREREQUISITES TO SUBSTANTIAL COMPLETION

A. Prior to requesting the Architect's inspection for certification of substantial completion, for either entire work or portions thereof, complete the following and list known exceptions in request:

1. In progress payment request coincident with or first following date claimed, show either 100% completion for portion of work claimed as substantially complete, or list incomplete items, value of incomplete items, and reasons for being incomplete.
2. Include supporting documentation for completion as indicated in these Contract Documents.
   a. Prepare a list of items to be completed and corrected (punch list), the value of items on the list, and reasons why the Work is not complete.
3. Submit statement showing accounting of changes to the Contract Sum.
4. Advise Owner of pending insurance change over requirements.
5. Submit specific warranties, workmanship/maintenance bonds, maintenance agreements, final certifications and similar documents.
6. All fire sprinklers, devices, alarm system, roofing system, doors, insulation, etc. requiring FM Research approval to submit certification from Factory Mutual.
7. Obtain and submit releases enabling Owner's full and unrestricted use of the work and access to services and utilities, including occupancy permits, operating certificates, and similar releases.
8. Deliver tools, spare parts, extra stocks of materials, and similar physical items to Owner obtaining a signed receipt of materials delivered. Refer to individual work sections for required quantities of spare parts, extra and overrun stock, maintenance tools and devices, keys, and similar physical units to be submitted.

9. Complete start up testing of systems, and instructions of Owner's operating/maintenance personnel. Discontinue, or change over, and remove from project site temporary facilities and services, along with construction tools and facilities, mockups, and similar elements.
10. Complete final clean up requirements.
11. Touch up and otherwise repair and restore marred exposed finishes.
12. Inspection: Submit a written request for inspection for Substantial Completion to Project Manager. On receipt of request, Architect and Project Manager will either proceed with inspection or notify Contractor of unfulfilled requirements. Architect will prepare the Certificate of Substantial Completion after inspection, the Project Manager will notify Contractor of items, either on Contractor's list or additional items identified by Architect that must be completed or corrected before certificate will be issued.
    a. Reinspection: Request reinspection when the Work identified in previous inspections as incomplete is completed or corrected.
    b. Results of completed inspection will form the basis of requirements for Final Completion.

B. Upon receipt of Contractor's request, the Project Manager and Architect will proceed with substantial completion inspection. Following inspection, the Architect will either prepare the certificate of substantial completion, or advise the Contractor of work which shall be performed prior to issuance of certificate. The work remaining to be performed shall be completed prior to the punch list for final acceptance.

C. Upon receipt of Contractor's notice that work has been completed, including all punch list items, but excepting incomplete items delayed because of circumstances acceptable to the Project Manager and Architect, the Project Manager and Architect will reinspect the work. Upon completion of reinspection, the Architect will either prepare the certificate of final acceptance or advise the Contractor of work not completed or obligations not fulfilled as required for final acceptance.

D. In the event that the work is not completed or obligations are not fulfilled as required for final acceptance and the Architect/CM is required to reinspect the work more often than the two inspections described, the Contractor shall compensate the Architect and/or the Project Manager at the rate of $500.00 for each additional site visit required for reinspections. The compensation shall be processed by change order as a deduction to the Contractor's Contract Sum, which amount will be paid to the Architect or Project Manager by the Owner, through a change order as an addition to the Architect's or Project Manager’s Contract Sum.

E. Substantial Completion shall be defined for this project that every element of the project/construction and the contract, based on the contract and amended drawings and specification sections, are installed and the building is deemed complete, less repairs and/or touch up type work that would be generally referred to as punchlist work. If any

components of the building, or site work associated with this contract are not installed, the project cannot be deemed substantially completed.

1.03 PREREQUISITES TO FINAL ACCEPTANCE

A. Prior to requesting Project Manager and Architect's final inspection for certification of final acceptance and final payment, complete the following and list known exceptions, in request:
   1. Submit final payment request with final releases and supporting documentation not previously submitted and accepted. Include certificates of insurance for products and completed operations where required.
   2. Submit release of liens for all subcontractors.
   3. Submit Contractor's statement that his final application, as presented, is the final bill and no other claims will be presented.
   4. Submit updated final statement, accounting for additional changes to Contract Sum including change orders and allowances.
   5. Submit certified copy of Engineer's final punch list of itemized work to be completed or corrected, stating that each item has been completed or otherwise resolved for acceptance, endorsed and dated by Architect.
   6. Submit one set of record documents, bound copies of maintenance/operating manuals, final project photographs, damage or settlement survey, property survey, and similar final record information.
   7. Complete final clean up requirements.
   8. Touch up and otherwise repair and restore marred exposed finishes.
   9. Submit notarized consent of surety to final payment.
   10. Submit final liquidated damages settlement statement, if required, acceptable to Project Manager and the Owner.
   11. Revise and submit evidence of final, continuing insurance coverage complying with insurance requirements.
   12. A letter from the Owner's representative certifying that he has been properly instructed in the operation and maintenance of equipment by the Contractor.
   13. 10% one year Maintenance Bond.
   14. Underwriter's Certificate or Electrical Sub Code Official's Approval.
   15. Fire Alarm Certification and Description - NFPA form 72C including local County of Chester.
   16. Final acceptance by Engineer of record documents
B. Except as otherwise indicated or requested by Project Manager/Architect, remove temporary protection devices and facilities that were installed during course of the work to protect previously completed work during remainder of construction period.

1.04 CLEAN UP

A. Remove waste materials from site and dispose of in a lawful manner.

PART 2 - PRODUCTS (NOT APPLICABLE)

PART 3 - EXECUTION

3.01 CLEANING

A. Where extra materials of value remaining after completion of associated work have become Owner's property, dispose of these to Owner's best advantage as directed.

B. After Substantial Completion of the Work, each Contractor shall do the final cleaning of the surfaces of his installations as may be required by the various Specification sections.

C. After each Contractor has cleaned their work, The General Contractor shall engage a professional cleaning service to perform final cleaning of the work consisting of cleaning each surface or unit to normal clean condition. Comply with manufacturer's instructions for cleaning operations and chemicals. The following are examples, but not by way of limitation, of cleaning levels required:

1. Remove labels that are not required as permanent labels.
2. Clean transparent materials, including mirrors and window/door glass, to a polished condition, removing substances that are noticeable as vision obscuring materials. Replace broken glass and damaged transparent materials.
3. Clean exposed exterior and interior hard surfaced finishes, to a dirt free condition, free of dust, stains, films and similar noticeable distracting substances. Except as otherwise indicated, avoid disturbance of natural weathering of exterior surfaces. Restore reflective surfaces to original reflective conditions.
4. Wipe surfaces of mechanical and electrical equipment clean, including elevator equipment and similar equipment; remove excess lubrication and other substances.
5. Remove debris and surface dust from limited access spaces including roofs, plenums, shafts, trenches, equipment vaults, manholes, attics and similar spaces.
6. Vacuum and clean carpeted surfaces and similar soft surfaces.
7. Clean light fixtures and lamps to function with full efficiency.
8. Clean and wax or polish all hard floors following manufacturer’s instructions.
9. Clean all window surfaces inside and outside.
10. Perform final cleaning in, on and around all casework, sinks, toilets fixtures, etc.
11. Clean Project site, yard, and grounds, in areas disturbed by construction activities, including landscape development areas, of rubbish, waste material, litter, and other foreign substances.
12. Sweep paved areas broom clean. Remove petrochemical spills, stains, and other foreign deposits.
13. Rake grounds that are neither planted nor paved to a smooth, even-textured surface.

14. Remove tools, construction equipment, machinery, and surplus material from Project site.
15. Remove snow and ice to provide safe access to building.
16. Clean exposed exterior and interior hard-surfaced finishes to a dirt-free condition, free of stains, films, and similar foreign substances. Avoid disturbing natural weathering of exterior surfaces. Restore reflective surfaces to their original condition.
17. Sweep concrete floors broom clean.
18. Replace parts subject to unusual operating conditions.
19. Clean plumbing fixtures to a sanitary condition, free of stains, including stains resulting from water exposure.
20. Replace disposable air filters and clean permanent air filters. Clean exposed surfaces of diffusers, registers, and grills.
21. Clean ducts, blowers, and coils if units were operated without filters during construction.
22. Clean light fixtures, lamps, globes, and reflectors to function with full efficiency. Replace burned-out bulbs, and those noticeably dimmed by hours of use, and defective and noisy starters in fluorescent and mercury vapor fixtures to comply with requirements for new fixtures.
23. Leave Project clean and ready for occupancy.

D. Comply with safety standards for cleaning. Do not burn waste materials. Do not bury debris or excess materials on Owner's property. Do not discharge volatile, harmful, or dangerous materials into drainage systems. Remove waste materials from Project site and dispose of lawfully.

3.02 RECORD DOCUMENTS (REFER TO SECTION 01340, PROJECT REQUIREMENTS FOR SUBMITTING RECORD DOCUMENTS)

3.03 REMOVE TEMPORARY FACILITIES

A. At the completion of the work prior to final payment, remove all temporary facilities entirely from site, including, but not limited to, the following: Field offices, trailers, shanties, sheds, job telephone, temporary toilets, temporary enclosures, dust barriers and other temporary protection devices.

SECTION 013400 - PROJECT RECORD DOCUMENTS

PART 1 - GENERAL

1.01 SUMMARY

A. Section Includes:
   1. Project record documents consisting of:
      a. Record drawings.
      b. Record project manual (specifications).

1.02 SUBMITTALS

A. Project Record Documents: Submit after substantial completion, but prior to final completion.
   1. Record drawings: Submit in form of opaque prints.
      a. Sets shall include all drawings, whether changed or not.
   2. Other record documents: Submit originals or good quality photocopies.
   3. Each Sub contractor is responsible for their respective trade, record documents and record drawings. Combine with General Contractor record drawing documents for a complete set.

PART 2 - PRODUCTS (NOT USED)

PART 3 - EXECUTION

3.01 MAINTENANCE OF PROJECT RECORD DOCUMENTS

A. Do not use record documents of any type for construction purposes.
B. Maintain record documents in a secure location at the site while providing for access by the contractor and the architect during normal working hours; store in a fire-resistive room or container outside of normal working hours.
C. Record information as soon as possible after it is obtained.
D. Assign a person or persons responsible for maintaining record documents.
E. Record the following types of information on all applicable record documents:
   1. Dimensional changes.
   2. New and revised details.
   3. Revisions to electrical circuits.
   4. Locations of utilities concealed in construction.
   5. Particulars on concealed products which will not be easy to identify later.
   6. Changes made by modifications to the contract; note identification numbers if applicable.
   7. New information which may be useful to the owner, but which was not shown in either the contract documents or submittals.

3.02 RECORD DRAWINGS

A. Maintain a complete set of opaque prints of the contract drawings, marked to show changes.
B. Where the actual work differs from that shown on the drawings, mark this set to show the actual work.
   1. Mark location of concealed items before they are covered by other work.
   2. Mark either record contract drawings or shop drawings, whichever are best suited to show the change.
C. When the contractor is required by a provision of a modification to prepare a new drawing, rather than to revise existing drawings, obtain instructions from the architect as to the drawing scale and information required.
D. Keep drawings in labeled, bound sets.
   1. Mark with red pencil.
   2. Mark work of separate contracts with different colors of pencils.
   3. Incorporate new drawings into existing sets, as they are issued.
E. Where record drawings are also required as part of operation and maintenance data submittals, copy marks to another opaque print obtained from the architect.

3.03 RECORD PROJECT MANUAL

A. Maintain a complete copy of the project manual, marked to show changes.
B. Where the actual work differs from that shown in the project manual, mark the record copy to show the actual work.
   1. Include a copy of each addendum and modification to the contract.
   2. In addition to the types of information required on all record documents, record the following types of information:
      a. Product options taken, when the specification allows more than one.
      b. Proprietary name and model number of actual products furnished, for each product, material, and item of equipment specified.
      c. Name of the supplier and installer, for each product for which neither a product data submittal nor a maintenance data submittal was specified.

3.04 TRANSMITTAL TO OWNER (THROUGH THE ENGINEER)

A. Collect, organize, label, and package ready for reference.
   1. Bind print sets with durable paper covers.
   2. Label each document (and each sheet of drawings) with "PROJECT RECORD DOCUMENTS - This document has been prepared using information furnished by _____" [insert the contractor's name], and the date of preparation.
B. Submit to the Project Manager for transmittal to the Architect, unless otherwise indicated.

C. Submit to the Architect four (4) sets of Operation and Maintenance Manuals in three-ring binders, by volume, and indexed per binder (with one master index) to be transmitted to the Architect/Engineer for approval: All to be submitted at one time, not piece meal. Indexing should follow the specification section numbers.
   1. Include all inspection/approvals/certifications
   2. All approved submittals and cut sheets as well as manufacturer's operation and maintenance manuals for each section.
   3. Manuals are to be completed in volumes, three ring binders, starting with Division 1 and continuing through the last projects Division. The number of volumes is determined by the number of spec section the projects has and by the amount of paper/copies for complete sets of three ring binders.
   4. List of all contractors and vendors for the project with names, addresses and phone numbers.

SECTION 015240 - CONSTRUCTION WASTE MANAGEMENT

PART 1 – GENERAL

1.01 RELATED DOCUMENTS

A. Drawings and general provisions of the Contract, including General and Supplementary Conditions and Division 1 Specification Sections, apply to this Section.

1.02 SUMMARY

A. This Section includes administrative and procedural requirements for the following:
B. Salvaging nonhazardous demolition and construction waste.
   1. Recycling nonhazardous demolition and construction waste.
   2. Disposing of nonhazardous demolition and construction waste.
C. Related Sections include the following:
   1. All of Division 1 and attached specifications and drawings that make a part of this contract.

1.03 DEFINITIONS

A. Construction Waste: Building and site improvement materials and other solid waste resulting from construction, remodeling, renovation, or repair operations. Construction waste includes packaging.
B. Demolition Waste: Building and site improvement materials resulting from demolition or selective demolition operations.
C. Disposal: Removal off-site of demolition and construction waste and subsequent sale, recycling, reuse, or deposit in landfill or incinerator acceptable to authorities having jurisdiction.
D. Recycle: Recovery of demolition or construction waste for subsequent processing in preparation for reuse.
E. Salvage: Recovery of demolition or construction waste and subsequent sale or reuse in another facility.

1.04 SUBMITTALS

A. Waste Management Plan: Submit 4 copies of plan within 30 days of date established for the Notice to Proceed.
B. Records of Donations: Indicate receipt and acceptance of salvageable waste donated to individuals and organizations. Indicate whether organization is tax exempt.
C. Records of Sales: Indicate receipt and acceptance of salvageable waste sold to individuals and organizations. Indicate whether organization is tax exempt.
D. Recycling and Processing Facility Records: Indicate receipt and acceptance of recyclable waste by recycling and processing facilities licensed to accept them. Include manifests, weight tickets, receipts, and invoices.

E. Landfill and Incinerator Disposal Records: Indicate receipt and acceptance of waste by landfills and incinerator facilities licensed to accept them. Include manifests, weight tickets, receipts, and invoices.

1.05 QUALITY ASSURANCE

A. Regulatory Requirements: Comply with hauling and disposal regulations of authorities having jurisdiction.

B. Waste Management Conference: Conduct conference at Project site to comply with requirements in Division 1. Review methods and procedures related to waste management including, but not limited to, the following:
   1. Review and discuss waste management plan.
   2. Review requirements for documenting quantities of each type of waste and its disposition.
   3. Review and finalize procedures for materials separation and verify availability of containers and bins needed to avoid delays.
   4. Review procedures for periodic waste collection and transportation to recycling and disposal facilities.
   5. Review waste management requirements for each trade.

1.06 WASTE MANAGEMENT PLAN

A. General: Develop plan consisting of waste identification, and waste reduction work plan. Indicate quantities by weight or volume, but use same units of measure throughout waste management plan.

B. Waste Identification: Indicate anticipated types and quantities of demolition, site-clearing, and construction waste generated by the Work. Include estimated quantities and assumptions for estimates.

C. Waste Reduction Work Plan: List each type of waste and whether it will be salvaged, recycled, or disposed of in landfill or incinerator. Include points of waste generation, total quantity of each type of waste, quantity for each means of recovery, and handling and transportation procedures.
   1. Salvaged Materials for Sale: For materials that will be sold to individuals and organizations, include list of their names, addresses, and telephone numbers.
   2. Salvaged Materials for Donation: For materials that will be donated to individuals and organizations, include list of their names, addresses, and telephone numbers.
   3. Recycled Materials: Include list of local receivers and processors and type of recycled materials each will accept. Include names, addresses, and telephone numbers.
   4. Disposed Materials: Indicate how and where materials will be disposed of. Include name, address, and telephone number of each landfill and incinerator facility.
   5. Handling and Transportation Procedures: Include method that will be used for separating recyclable waste including sizes of containers, container labeling, and

designated location on Project site where materials separation will be located.

PART 2 - PRODUCTS (NOT USED)

PART 3 – EXECUTION

3.01 PLAN IMPLEMENTATION

A. General: Implement waste management plan as approved by Project Manager. Provide handling, containers, storage, signage, transportation, and other items as required to implement waste management plan during the entire duration of the Contract.
   1. Comply with Division 1 Section "Temporary Facilities" for operation, termination, and removal requirements.
B. Training: Train workers, subcontractors, and suppliers on proper waste management procedures, as appropriate for the Work occurring at Project site.
   1. Distribute waste management plan to entities when they first begin work on-site. Review plan procedures and locations established for salvage, recycling, and disposal.
C. Site Access and Temporary Controls: Conduct waste management operations to ensure minimum interference with roads, streets, walks, walkways, and other adjacent occupied and used facilities.
   1. Designate and label specific areas on Project site necessary for separating materials that are to be salvaged, recycled, reused, donated, and sold.
   2. Comply with Division 1 Section "Temporary Facilities and Controls" for controlling dust and dirt, environmental protection, and noise control.

3.02 SALVAGING DEMOLITION WASTE

A. Salvaged Items for Sale and Donation: Not permitted on Project site.

3.03 RECYCLING DEMOLITION AND CONSTRUCTION WASTE, GENERAL

A. General: Recycle beverage containers used by on-site workers.
B. Recycling Incentives: Revenues, savings, rebates, tax credits, and other incentives received for recycling waste materials shall accrue to the Contractor.
C. Procedures: Separate recyclable waste from other waste materials, trash, and debris. Separate recyclable waste by type at Project site to the maximum extent practical.
   1. Provide appropriately marked containers or bins for controlling recyclable waste until they are removed from Project site. Include list of acceptable and unacceptable materials at each container and bin.
      a. Inspect containers and bins for contamination and remove contaminated materials if found.
   2. Stockpile processed materials on-site without intermixing with other materials. Place, grade, and shape stockpiles to drain surface water. Cover to present windblown dust.

3. Stockpile materials away from construction area.
4. Store components off the ground and protect from the weather.
5. Remove recyclable waste off Owner's property and transport to recycling receiving or processor.

3.04 RECYCLING DEMOLITION WASTE

A. Asphaltic Concrete Paving: Break up and transport paving to asphalt-recycling facility.
B. Concrete: break up and sort rebar as best as possible. Recycle all concrete.
C. Recycle all metal products from the building before demolition (aluminum, steel etc)
D. Recycle as much product as possible and provide a complete report to TCNJ to confirm the percentage recycled on the project.

3.05 RECYCLING CONSTRUCTION WASTE

A. Packaging:
   1. Cardboard and Boxes: Break down packaging into flat sheets. Bundle and store in a dry location.
   2. Polystyrene Packaging: Separate and bag materials.
   3. Pallets: As much as possible, require deliveries using pallets to remove pallets from Project site. For pallets that remain on-site, break down pallets into component wood pieces and comply with requirements for recycling wood.
   4. Crates: Break down crates into component wood pieces and comply with requirements for recycling wood.
   5. Wood Materials:
      a. Clean Cut-Offs of Lumber: Grind or chip into small pieces.

3.06 DISPOSAL OF WASTE

A. General: Except for items or materials to be salvaged, recycled, or otherwise reused, remove waste materials from Project site and legally dispose of them in a landfill or incinerator acceptable to authorities having jurisdiction.
   1. Except as otherwise specified, do not allow waste materials that are to be disposed of accumulate on-site.
   2. Remove and transport debris in a manner that will prevent spillage on adjacent surfaces and areas.
B. Burning: Do not burn waste materials on site.
C. Burying: Do not bury waste materials on site.
D. Disposal: Transport waste materials off Owner's property and legally dispose of them.
E. Washing waste materials into sewers or drains is not permitted.

SECTION 220517 - SLEEVES AND SLEEVE SEALS FOR PLUMBING PIPING

PART 1 GENERAL

1.01 SECTION INCLUDES

A. Pipe sleeves.
B. Pipe sleeve-seals.

1.02 REFERENCE STANDARDS

A. ASTM C592 - Standard Specification for Mineral Fiber Blanket Insulation and Blanket-Type Pipe Insulation (Metal-Mesh Covered) (Industrial Type); 2022a.
B. ASTM E814 - Standard Test Method for Fire Tests of Penetration Firestop Systems; 2023a.

PART 2 PRODUCTS

2.01 PIPE SLEEVES

A. Pipe Passing Through Below Grade Exterior Walls:
   1. Zinc coated or cast iron pipe.
   2. Provide watertight space with link rubber or modular seal between sleeve and pipe on both pipe ends.
B. Clearances:
   1. Provide allowance for insulated piping.
   2. Wall, Floor, Partitions, and Beam Flanges: 1 inch (25 mm) greater than external pipe diameter.
   3. All Rated Openings: Caulked tight with fire stopping material complying with ASTM E814 in accordance with Section 078400 to prevent the spread of fire, smoke, and gases.

2.02 PIPE-SLEEVE SEALS

A. Modular Mechanical Sleeve-Seal:
   1. Elastomer-based interlocking links continuously fill annular space between pipe and wall-sleeve, wall or casing opening.
   2. Watertight seal between pipe and wall-sleeve, wall or casing opening.
   3. Size and select seal component materials in accordance with service requirements.
   4. Glass-reinforced plastic pressure end plates.

PART 3 EXECUTION

3.01 INSTALLATION

A. Route piping in orderly manner, plumb and parallel to building structure. Maintain gradient.

B. Install piping to conserve building space, to not interfere with use of space and other work.
C. Install piping and pipe sleeves to allow for expansion and contraction without stressing pipe, joints, or connected equipment.
D. Provide sleeves when penetrating footings, floors, walls, and partitions. Seal pipe including sleeve penetrations to achieve fire resistance equivalent to fire separation required.
E. Manufactured Sleeve-Seal Systems:
    1. Install manufactured sleeve-seal systems in sleeves located in grade slabs and exterior concrete walls at piping entrances into building.
    2. Provide sealing elements of the size, quantity, and type required for the piping and sleeve inner diameter or penetration diameter.
    3. Locate piping in center of sleeve or penetration.
    4. Install field assembled sleeve-seal system components in annular space between sleeve and piping.
    5. Tighten bolting for a water-tight seal.
    6. Install in accordance with manufacturer's recommendations.
F. When installing more than one piping system material, ensure system components are compatible and joined to ensure the integrity of the system. Provide necessary joining fittings. Ensure flanges, union, and couplings for servicing are consistently provided.

3.02 CLEANING

A. Upon completion of work, clean all parts of the installation.
B. Clean equipment, pipes, valves, and fittings of grease, metal cuttings, and sludge that may have accumulated from the installation and testing of the system.

END OF SECTION 220517

SECTION 220519 - METERS AND GAUGES FOR PLUMBING PIPING

PART 1 GENERAL

1.01 SECTION INCLUDES

A. Flow meters.
B. Pressure gauges.
C. Thermometers.
D. Pressure-temperature test plugs.

1.02 REFERENCE STANDARDS

A. ASTM E1 - Standard Specification for ASTM Liquid-in-Glass Thermometers; 2014 (Reapproved 2020).
B. ASTM E77 - Standard Test Method for Inspection and Verification of Thermometers; 2014 (Reapproved 2021).

PART 2 PRODUCTS

2.01 THERMOMETERS

A. General:
   1. Product Compliance: ASTM E1.
   2. Lens: Clear glass, except where stated.
   3. Accuracy: One percent, when tested in accordance with ASTM E77, except where stated.
   4. Scale: Black markings depicting single scale in degrees F where expected process value falls half-span of standard temperature range.

2.02 PRESSURE-TEMPERATURE TEST PLUGS:

A. Size: 500 psi (34.5 bar) capacity; 1/2 inch (13 mm) MPT brass fitting with gasket, cap, and retaining strap for 1/8 inch (3 mm) pressure gauge or temperature probe.
B. Wetted Materials per Temperature Range:
   1. Up to 200 degrees F (93 degrees C): Brass probe with neoprene core.

PART 3 EXECUTION

3.01 EXAMINATION

A. Do not install instrumentation when areas are under construction, except for required rough-in, taps, supports, and test plugs.

3.02 INSTALLATION

A. Install metering products in accordance with manufacturer's instructions for intended fluid type and service.
B. Install thermometers as follows:

1. Hot Water Heaters: Place upstream and downstream of heater. Add one on the inlet end when using steam as the water heating medium.
2. Piping: Install thermometers in branch butt weld connection fitting or socket-weld thermowell. Enlarge pipes smaller than 2-1/2 inch (60 mm) to accommodate sockets. Ensure sockets are above insulation clearance.

END OF SECTION 220519

SECTION 220523 - GENERAL-DUTY VALVES FOR PLUMBING PIPING

PART 1 GENERAL

1.01 SECTION INCLUDES

A. Ball valves.
B. Check valves.

1.02 REFERENCE STANDARDS

A. ASME B16.10 - Face-to-Face and End-to-End Dimensions of Valves; 2022, with Errata (2023).
B. ASME B16.18 - Cast Copper Alloy Solder Joint Pressure Fittings; 2021.
C. ASME B16.34 - Valves — Flanged, Threaded, and Welding End; 2020.
D. ASME B31.9 - Building Services Piping; 2020.
E. MSS SP-45 - Drain and Bypass Connections; 2020.
F. NSF 61 - Drinking Water System Components - Health Effects; 2024.
G. NSF 372 - Drinking Water System Components - Lead Content; 2024.

1.03 SUBMITTALS

A. See Section 013000 - Administrative Requirements for submittal procedures.
B. Product Data: Provide data on valves including manufacturers catalog information. Submit performance ratings, rough-in details, weights, support requirements, and piping connections.

1.04 DELIVERY, STORAGE, AND HANDLING

A. Use the following precautions during storage:
   1. Maintain valve end protection and protect flanges and specialties from dirt.
      a. Provide temporary inlet and outlet caps.
      b. Maintain caps in place until installation.

PART 2 PRODUCTS

2.01 APPLICATIONS

A. Listed pipe sizes shown using nominal pipe sizes (NPS) and nominal diameter (DN).
B. Provide the following valves for the applications if not indicated on drawings:
   1. Shutoff: Ball, butterfly, _____.
C. Domestic, Hot and Cold Water Valves:
   1. 2 inch (50 mm, DN) and Smaller:
      a. Ball: One piece, full port, brass with brass trim.
   2. 2-1/2 inch (65 mm, DN) and Larger:
      a. Iron Ball: Class 150.

2.02 GENERAL REQUIREMENTS

A. Valve Pressure and Temperature Ratings: No less than rating indicated; as required for system pressures and temperatures.
B. Valve Sizes: Match upstream piping unless otherwise indicated.
C. General ASME Compliance:
   1. Ferrous Valve Dimensions and Design Criteria: ASME B16.10 and ASME B16.34.
   2. Solder-joint Connections: ASME B16.18.
   3. Building Services Piping Valves: ASME B31.9.
D. Potable Water Use:
   1. Certified: Approved for use in compliance with NSF 61 and NSF 372.
   2. Lead-Free Certified: Wetted surface material includes less than 0.25 percent lead content.
E. Valve Bypass and Drain Connections: MSS SP-45.

PART 3 EXECUTION

3.01 EXAMINATION

A. Discard all packing materials and verify that valve interior, including threads and flanges are completely clean without signs of damage or degradation that could result in leakage.
B. Verify valve parts to be fully operational in all positions from closed to fully open.
C. Confirm gasket material to be suitable for the service, to be of correct size, and without defects that could compromise effectiveness.
D. Should valve is determined to be defective, replace with new valve.

3.02 INSTALLATION

A. Provide unions or flanges with valves to facilitate equipment removal and maintenance while maintaining system operation and full accessibility for servicing.
B. Provide separate valve support as required and locate valve with stem at or above center of piping, maintaining unimpeded stem movement.
C. Install check valves where necessary to maintain direction of flow as follows:
   1. Lift Check: Install with stem plumb and vertical.
   2. Swing Check: Install horizontal maintaining hinge pin level.

END OF SECTION 220523

SECTION 220529 - HANGERS AND SUPPORTS FOR PLUMBING PIPING AND EQUIPMENT

PART 1 GENERAL

1.01 SECTION INCLUDES

A. Pipe hangers.
B. Pipe supports, guides, shields, and saddles.
C. Anchors and fasteners.

1.02 RELATED REQUIREMENTS

A. Section 055000 - Metal Fabrications.

1.03 REFERENCE STANDARDS

A. ASTM A123/A123M - Standard Specification for Zinc (Hot-Dip Galvanized) Coatings on Iron and Steel Products; 2017.
B. ASTM A153/A153M - Standard Specification for Zinc Coating (Hot-Dip) on Iron and Steel Hardware; 2023.
C. ASTM B633 - Standard Specification for Electrodeposited Coatings of Zinc on Iron and Steel; 2023.

1.04 ADMINISTRATIVE REQUIREMENTS

A. Coordination:
   1. Coordinate sizes and arrangement of supports and bases with the actual equipment and components to be installed.
   2. Coordinate the work with other trades to provide additional framing and materials required for installation.
   3. Coordinate compatibility of support and attachment components with mounting surfaces at the installed locations.
   4. Coordinate the arrangement of supports with ductwork, piping, equipment and other potential conflicts installed under other sections or by others.

1.05 DELIVERY, STORAGE, AND HANDLING

A. Receive, inspect, handle, and store products in accordance with manufacturer's instructions.

PART 2 PRODUCTS

2.01 GENERAL REQUIREMENTS

A. Provide required hardware to hang or support piping, equipment, or fixtures with related accessories as necessary to complete installation of plumbing work.
B. Provide hardware products listed, classified, and labeled as suitable for intended purpose.

C. Do not use wire, chain, perforated pipe strap, or wood for permanent supports unless specifically indicated or permitted.
D. Materials for Metal Fabricated Supports: Comply with Section 055000.
   1. Zinc-Plated Steel: Electroplated in accordance with ASTM B633 unless stated otherwise.
   2. Galvanized Steel: Hot-dip galvanized in accordance with ASTM A123/A123M or ASTM A153/A153M unless stated otherwise.
E. Corrosion Resistance: Use corrosion-resistant metal-based materials fully compatible with exposed piping materials and suitable for the environment where installed.

PART 3 EXECUTION

3.01 EXAMINATION

A. Verify that field measurements are as indicated.
B. Verify that mounting surfaces are ready to receive support and attachment components.
C. Verify that conditions are satisfactory for installation prior to starting work.

3.02 INSTALLATION

A. Install products in accordance with manufacturer's instructions.
B. Provide independent support from building structure. Do not provide support from piping, ductwork, conduit, or other systems.
C. Do not penetrate or otherwise notch or cut structural members without approval of Structural Engineer.
D. Provide thermal insulated pipe supports complete with hangers and accessories. Install thermal insulated pipe supports during the installation of the piping system.
E. Equipment Support and Attachment:
   1. Use metal fabricated supports or supports assembled from metal channel (strut) to support equipment as required.
   2. Use metal channel (strut) secured to studs to support equipment surface-mounted on hollow stud walls when wall strength is not sufficient to resist pull-out.
   3. Use metal channel (strut) to support surface-mounted equipment in wet or damp locations to provide space between equipment and mounting surface.
   4. Securely fasten floor-mounted equipment. Do not install equipment such that it relies on its own weight for support.
F. Secure fasteners according to manufacturer's recommended torque settings.
G. Remove temporary supports.

3.03 FIELD QUALITY CONTROL

A. See Section 014000 - Quality Requirements for additional requirements.
B. Inspect support and attachment components for damage and defects.

C. Repair cuts and abrasions in galvanized finishes using zinc-rich paint recommended by manufacturer. Replace components that exhibit signs of corrosion.
D. Correct deficiencies and replace damaged or defective support and attachment components.

END OF SECTION 220529

SECTION 220548 - VIBRATION AND SEISMIC CONTROLS FOR PLUMBING PIPING AND EQUIPMENT

PART 1 GENERAL

1.01 SECTION INCLUDES

A. Vibration isolation requirements.
B. Vibration isolators.

1.02 REFERENCE STANDARDS

A. ASCE 7 - Minimum Design Loads and Associated Criteria for Buildings and Other Structures; Most Recent Edition Cited by Referring Code or Reference Standard.

1.03 SUBMITTALS

A. See Section 013000 - Administrative Requirements for submittal procedures.
B. Design Documents: Prepare and submit all information required for plan review and permitting by authorities having jurisdiction, including but not limited to floor plans, details, and calculations.
C. Product Data: Provide manufacturer's standard catalog pages and data sheets for products, including materials, fabrication details, dimensions, and finishes.
   1. Vibration Isolators: Include rated load capacities and deflections; include information on color coding or other identification methods for spring element load capacities.

1.04 QUALITY ASSURANCE

A. Comply with applicable building code.

1.05 DELIVERY, STORAGE, AND HANDLING

A. Receive, inspect, handle, and store products in accordance with manufacturer's instructions.

PART 2 PRODUCTS

2.01 VIBRATION ISOLATION REQUIREMENTS

A. Provide vibration isolation systems to reduce vibration transmission to supporting structure from vibration-producing plumbing equipment and/or plumbing connections to vibration-isolated equipment.
B. Comply with applicable general recommendations of ASHRAE (HVACA), where not in conflict with other specified requirements:
C. General Requirements:
   1. Select vibration isolators to provide required static deflection.
   2. Select vibration isolators for uniform deflection based on distributed operating weight of actual installed equipment.

PART 3 EXECUTION

3.01 EXAMINATION

A. Verify that field measurements are as shown on the drawings.
B. Verify that mounting surfaces are ready to receive vibration isolation and/or seismic control components and associated attachments.
C. Verify that conditions are satisfactory for installation prior to starting work.

3.02 INSTALLATION

A. Install products in accordance with manufacturer's instructions.
B. Install anchors and fasteners in accordance with ICC Evaluation Services, LLC (ICC-ES) evaluation report conditions of use where applicable.
C. Secure fasteners according to manufacturer's recommended torque settings.
D. Install flexible piping connections to provide sufficient slack for vibration isolation and/or seismic relative displacements as indicated or as required.
E. Vibration Isolation Systems:
    1. Isolator Hangers:
        a. Use precompressed isolator hangers where required to facilitate installation and prevent damage to equipment utility connection provisions.
        b. Locate isolator hangers at top of hanger rods in accordance with manufacturer's instructions.
    2. Clean debris from beneath vibration-isolated equipment that could cause short-circuiting of isolation.
    3. Use elastomeric grommets for attachments where required to prevent short-circuiting of isolation.
    4. Adjust isolators to be free of isolation short circuits during normal operation.
    5. Do not overtighten fasteners such that resilient material isolator pads are compressed beyond manufacturer's maximum recommended deflection.

3.03 FIELD QUALITY CONTROL

A. See Section 014000 - Quality Requirements, for additional requirements.
B. Inspect vibration isolation and/or seismic control components for damage and defects.
C. Vibration Isolation Systems:
    1. Verify isolator static deflections.
    2. Verify vibration isolation performance during normal operation; investigate sources of isolation short circuits.
D. Correct deficiencies and replace damaged or defective vibration isolation and/or seismic control components.

END OF SECTION 220548

SECTION 220553 - IDENTIFICATION FOR PLUMBING PIPING AND EQUIPMENT

PART 1 GENERAL

1.01 SECTION INCLUDES
A. Nameplates.
B. Pipe markers.

1.02 RELATED REQUIREMENTS
A. Section 099123 - Interior Painting: Identification painting.

1.03 REFERENCE STANDARDS
A. ASME A13.1 - Scheme for the Identification of Piping Systems; 2023.
B. ASTM D709 - Standard Specification for Laminated Thermosetting Materials; 2017.

1.04 SUBMITTALS
A. See Section 013000 - Administrative Requirements for submittal procedures.
B. Schedules:
   1. Submit plumbing component identification schedule listing equipment, piping, and valves.
   2. Detail proposed component identification data in terms of of wording, symbols, letter size, and color coding to be applied to corresponding product.
   3. Valve Data Format: Include id-number, location, function, and model number.
C. Product Data: Provide manufacturers catalog literature for each product required.
D. Manufacturer's Installation Instructions: Indicate special procedures, and installation.
E. Project Record Documents: Record actual locations of tagged valves.

PART 2 PRODUCTS

2.01 PLUMBING COMPONENT IDENTIFICATION GUIDELINE
A. Nameplates:
   1. Heat exchangers, water heaters, and other heat transfer products.
   2. Control panels, transducers, and other related control equipment products.
   3. Pumps, tanks, filters, water treatment devices, and other plumbing equipment products.
B. Pipe Markers: 3/4 inch (20 mm) diameter and higher.

2.02 NAMEPLATES
A. Description: Laminated piece with up to three lines of text.
   1. Letter Color: White.
   2. Letter Height: 1/4 inch (6 mm).

2.03 PIPE MARKERS

A. Comply with ASME A13.1.
B. Flexible Tape Marker: Flexible, vinyl film tape with pressure-sensitive adhesive backing and printed markings.
C. Identification Scheme, ASME A13.1:
    1. Primary: External Pipe Diameter, Uninsulated or Insulated.
        a. 3/4 to 1-1/4 inches (19 to 32 mm): Use 8 inch (203 mm) field-length with 1/2 inch (13 mm) text height.
        b. 1-1/2 to 2 inches (38 to 51 mm): Use 8 inch (203 mm) field-length with 3/4 inch (19 mm) text height.
        c. 2-1/2 to 6 inches (64 to 152 mm): Use 12 inch (305 mm) field-length with 1-1/4 inch (32 mm) text height.
    2. Secondary: Color scheme per fluid service.
        a. Water; Potable, Cooling, Boiler Feed, and Other: White text on green background.
    3. Tertiary: Other Details.
        a. Directional flow arrow.
        b. Line temperature.

PART 3 EXECUTION

3.01 PREPARATION

A. Degrease and clean surfaces to receive identification products.
B. Prepare surfaces for stencil painting, see Section 099123.

3.02 INSTALLATION

A. Install tags in clear view and align with axis of piping
B. Install plastic pipe markers in accordance with manufacturer's instructions.

END OF SECTION 220553

SECTION 220719 - PLUMBING PIPING INSULATION

PART 1 GENERAL

1.01 SECTION INCLUDES

A. Glass fiber insulation.
B. Jacketing and accessories.

1.02 REFERENCE STANDARDS

A. ASTM E84 - Standard Test Method for Surface Burning Characteristics of Building Materials; 2023c.
B. ASTM E96/E96M - Standard Test Methods for Gravimetric Determination of Water Vapor Transmission Rate of Materials; 2023.
C. UL 723 - Standard for Test for Surface Burning Characteristics of Building Materials; Current Edition, Including All Revisions.

1.03 SUBMITTALS

A. See Section 013000 - Administrative Requirements for submittal procedures.
B. Product Data: Provide product description, thermal characteristics, list of materials and thickness for each service, and locations.
C. Manufacturer's Instructions: Indicate installation procedures that ensure acceptable workmanship and installation standards will be achieved.

1.04 DELIVERY, STORAGE, AND HANDLING

A. Accept materials on site, labeled with manufacturer's identification, product density, and thickness.

PART 2 PRODUCTS

2.01 REGULATORY REQUIREMENTS

A. Surface Burning Characteristics: Flame spread index/Smoke developed index of 25/50, maximum, when tested in accordance with ASTM E84 or UL 723.

2.02 JACKETING AND ACCESSORIES

A. PVC Plastic Jacket:
    1. Jacket: One piece molded type fitting covers and sheet material, off-white color.
        a. Minimum Service Temperature: 0 degrees F (Minus 18 degrees C).
        b. Maximum Service Temperature: 150 degrees F (66 degrees C).
        c. Moisture Vapor Permeability: 0.002 perm inch (0.0029 ng/(Pa s m)), maximum, when tested in accordance with ASTM E96/E96M.
        d. Thickness: 10 mil, 0.010 inch (0.25 mm).
        e. Connections: Brush on welding adhesive.
    2. Covering Adhesive Mastic: Compatible with insulation.

PART 3 EXECUTION

3.01 EXAMINATION

A. Verify that piping has been tested before applying insulation materials.
B. Verify that surfaces are clean and dry, with foreign material removed.

3.02 INSTALLATION

A. Install in accordance with manufacturer's instructions.
B. Exposed Piping: Locate insulation and cover seams in least visible locations.
C. Inserts and Shields:
   1. Application: Piping 1-1/2 inches (40 mm) diameter or larger.
   2. Shields: Galvanized steel between pipe hangers or pipe hanger rolls and inserts.
   3. Insert Location: Between support shield and piping and under the finish jacket.
D. Continue insulation through walls, sleeves, pipe hangers, and other pipe penetrations. Finish at supports, protrusions, and interruptions. At fire separations, see Section 078400.
E. Pipe Exposed in Mechanical Equipment Rooms or Finished Spaces (less than 10 feet (3 meters) above finished floor): Finish with PVC jacket and fitting covers.

3.03 SCHEDULES

A. Refer to pipe schedule on construction documents.

END OF SECTION 220719

SECTION 221005 - PLUMBING PIPING

PART 1 GENERAL

1.01 SECTION INCLUDES

A. Domestic water piping, above grade.
B. Natural gas piping, above grade.
C. Pipe flanges, unions, and couplings.
D. Pipe hangers and supports.
E. Pipe sleeve-seal systems.
F. Ball valves.
G. Pressure-temperature valves.

1.02 RELATED REQUIREMENTS

A. Section 220553 - Identification for Plumbing Piping and Equipment.
B. Section 330110.58 - Disinfection of Water Utility Piping Systems.

1.03 REFERENCE STANDARDS

A. ANSI LC 1/CSA 6.26 - Fuel Gas Piping Systems Using Corrugated Stainless Steel Tubing; 2023.
B. ANSI Z21.22 - American National Standard for Relief Valves for Hot Water Supply Systems; 2015 (Reaffirmed 2020).
C. ANSI Z223.1 - National Fuel Gas Code; 2024.
D. ASME B31.9 - Building Services Piping; 2020.
E. ASME BPVC-IX - Boiler and Pressure Vessel Code, Section IX - Qualification Standard for Welding, Brazing, and Fusing Procedures; Welders; Brazers; and Welding, Brazing, and Fusing Operators; 2023.
F. ASTM B813 - Standard Specification for Liquid and Paste Fluxes for Soldering of Copper and Copper Alloy Tube; 2016.
G. ASTM B828 - Standard Practice for Making Capillary Joints by Soldering of Copper and Copper Alloy Tube and Fittings; 2023.
H. ASTM D2855 - Standard Practice for the Two-Step (Primer and Solvent Cement) Method of Joining Poly (Vinyl Chloride) (PVC) or Chlorinated Poly (Vinyl Chloride) (CPVC) Pipe and Piping Components with Tapered Sockets; 2020.
I. ASTM E84 - Standard Test Method for Surface Burning Characteristics of Building Materials; 2023c.
J. AWWA C651 - Disinfecting Water Mains; 2023.
K. NSF 61 - Drinking Water System Components - Health Effects; 2024.
L. NSF 372 - Drinking Water System Components - Lead Content; 2024.
M. UL 723 - Standard for Test for Surface Burning Characteristics of Building Materials; Current Edition, Including All Revisions.

1.04 SUBMITTALS

A. See Section 013000 - Administrative Requirements for submittal procedures.
B. Product Data: Provide data on pipe materials, pipe fittings, valves, and accessories. Provide manufacturers catalog information. Indicate valve data and ratings.
C. Welders' Certificates: Submit certification of welders' compliance with ASME BPVC-IX.

1.05 DELIVERY, STORAGE, AND HANDLING

A. Accept valves on site in shipping containers with labeling in place. Inspect for damage.
B. Provide temporary protective coating on cast iron and steel valves.
C. Provide temporary end caps and closures on piping and fittings. Maintain in place until installation.
D. Protect piping systems from entry of foreign materials by temporary covers, completing sections of the work, and isolating parts of completed system.

PART 2 PRODUCTS

2.01 GENERAL REQUIREMENTS

A. Potable Water Supply Systems: Provide piping, pipe fittings, and solder and flux (if used), that comply with NSF 61 and NSF 372 for maximum lead content; label pipe and fittings.
B. Plenum-Installed Acid Waste Piping: Flame-spread index equal or below 25 and smoke-spread index equal or below 50 according to ASTM E84 or UL 723 tests.
C. REFER TO SCHEDULES

PART 3 EXECUTION

3.01 PREPARATION

A. Ream pipe and tube ends. Remove burrs. Bevel plain end ferrous pipe.
B. Remove scale and dirt, on inside and outside, before assembly.
C. Prepare piping connections to equipment with flanges or unions.

3.02 INSTALLATION

A. Install in accordance with manufacturer's instructions.
B. Provide non-conducting dielectric connections wherever jointing dissimilar metals.
C. Route piping in orderly manner and maintain gradient. Route parallel and perpendicular to walls.
D. Install piping to maintain headroom, conserve space, and not interfere with use of space.
E. Provide clearance in hangers and from structure and other equipment for installation of insulation and access to valves and fittings.

F. Provide access where valves and fittings are not exposed.
G. Install valves with stems upright or horizontal, not inverted. See Section 220523.
H. Install water piping to ASME B31.9.
I. Copper Pipe and Tube: Make soldered joints in accordance with ASTM B828, using specified solder, and flux meeting ASTM B813; in potable water systems use flux also complying with NSF 61 and NSF 372.
J. PVC Pipe: Make solvent-welded joints in accordance with ASTM D2855.
K. Sleeve pipes passing through partitions, walls, and floors.
L. Pipe Hangers and Supports:
    1. Support horizontal piping as indicated.
    2. Install hangers to provide minimum 1/2 inch (15 mm) space between finished covering and adjacent work.
    3. Place hangers within 12 inches (300 mm) of each horizontal elbow.
    4. Use hangers with 1-1/2 inch (40 mm) minimum vertical adjustment. Design hangers for pipe movement without disengagement of supported pipe.
    5. Where several pipes can be installed in parallel and at same elevation, provide multiple or trapeze hangers.
    6. Provide copper plated hangers and supports for copper piping.
    7. Prime coat exposed steel hangers and supports. Hangers and supports located in crawl spaces, pipe shafts, and suspended ceiling spaces are not considered exposed.

3.03 APPLICATION

A. Use grooved mechanical couplings and fasteners only in accessible locations.
B. Install unions downstream of valves and at equipment or apparatus connections.
C. Provide flow controls in water recirculating systems where indicated.

3.04 TOLERANCES

A. Water Piping: Slope at minimum of 1/32 inch per foot (1:400) and arrange to drain at low points.

3.05 FIELD TESTS AND INSPECTIONS

A. Verify and inspect systems according to requirements by the Authority Having Jurisdiction. In the absence of specific test and inspection procedures proceed as indicated below.
B. Domestic Water Systems:
    1. Perform hydrostatic testing for leakage prior to system disinfection.
    2. Test Preparation: Close each fixture valve or disconnect and cap each connected fixture.
    3. General:

a. Fill the system with water and raise static head to 10 psi (345 kPa) above service pressure. Minimum static head of 50 to 150 psi (345 to 1,034 kPa). As an exception, certain codes allow a maximum static pressure of 80 psi (551.6 kPa).

C. Gas Distribution Systems:
1. Test Preparation: Close each appliance valve or disconnect and cap each connected appliance.
2. General Systems:
a. Inject a minimum of 10 psi (68.9 kPa) of compressed air into the piping system for a duration of 15 minutes and verify with a gauge that no perceptible pressure drop is measured.
b. Ensure test pressure gauge has a range of twice the specific pressure rate selected with an accuracy of 1/10 of 1 pound (0.45 kg).
3. Welded Pipes or Systems with Service Pressures Above 14 in-wc (3.48 kPa):
a. Inject a minimum of 60 psi (413.7 kPa) of compressed air into the piping system for a duration of 30 minutes and verify with a gauge that no perceptible pressure drop is measured.
b. Ensure test pressure gauge has a range of twice the specific pressure rate selected with an accuracy of 1/10 of 1 pound (0.45 kg) with 1 psi (6.9 kPa) increments.

D. Test Results: Document and certify successful results, otherwise repair, document, and retest.

3.06 DISINFECTION OF DOMESTIC WATER PIPING SYSTEM

A. Disinfect water distribution system in accordance with Section 330110.58.
B. Prior to starting work, verify system is complete, flushed, and clean.
C. Ensure acidity (pH) of water to be treated is between 7.4 and 7.6 by adding alkali (caustic soda or soda ash) or acid (hydrochloric).
D. Inject disinfectant, free chlorine in liquid, powder, tablet, or gas form throughout system to obtain 50 to 80 mg/L residual.
E. Bleed water from outlets to ensure distribution and test for disinfectant residual at minimum 15 percent of outlets.
F. Maintain disinfectant in system for 24 hours.
G. If final disinfectant residual tests less than 25 mg/L, repeat treatment.
H. Flush disinfectant from system until residual equal to that of incoming water or 1.0 mg/L.
I. Take samples no sooner than 24 hours after flushing, from 10 percent of outlets and from water entry, and analyze in accordance with AWWA C651.

3.07 SCHEDULES

A. Pipe Hanger Spacing:

1. Metal Piping:
    a. Pipe Size: 1/2 inch (15 mm, DN) to 1-1/4 inch (32 mm, DN):
        1) Maximum Hanger Spacing: 6.5 ft (2 m).
        2) Hanger Rod Diameter: 3/8 inches (9 mm).
    b. Pipe Size: 1-1/2 inch (40 mm, DN) to 2 inch (50 mm, DN):
        1) Hanger Rod Diameter: 3/8 inch (9 mm).
    c. Pipe Size: 2-1/2 inch (65 mm, DN) to 3 inch (80 mm, DN):
        1) Maximum Hanger Spacing: 10 ft (3 m).
        2) Hanger Rod Diameter: 1/2 inch (13 mm).

END OF SECTION 221005

SECTION 221006 - PLUMBING PIPING SPECIALTIES

PART 1 GENERAL

1.01 SECTION INCLUDES
A. Water hammer arrestors.
B. Mixing valves.
C. Relief valves.
D. Air vents.

1.02 REFERENCE STANDARDS
A. NSF 61 - Drinking Water System Components - Health Effects; 2024.
B. NSF 372 - Drinking Water System Components - Lead Content; 2024.

1.03 SUBMITTALS
A. See Section 013000 - Administrative Requirements for submittal procedures.
B. Product Data: Provide component sizes, rough-in requirements, service sizes, and finishes.

1.04 DELIVERY, STORAGE, AND HANDLING
A. Accept specialties on site in original factory packaging. Inspect for damage.

PART 2 PRODUCTS

2.01 GENERAL REQUIREMENTS
A. Specialties in Potable Water Supply Systems: Provide products that comply with NSF 61 and NSF 372 for maximum lead content.
B. REFER TO SCHEDULES

PART 3 EXECUTION

3.01 INSTALLATION
A. Install in accordance with manufacturer's instructions.
B. Install approved potable water protection devices on plumbing lines where contamination of domestic water may occur; on boiler feed water lines, janitor rooms, fire sprinkler systems, premise isolation, irrigation systems, flush valves, interior and exterior hose bibbs.

END OF SECTION 221006

SECTION 223000 - PLUMBING EQUIPMENT

PART 1 GENERAL

1.01 SECTION INCLUDES

A. Commercial gas-fired water heaters.

1.02 REFERENCE STANDARDS

A. ANSI Z21.10.1 - Gas Water Heaters, Volume I, Storage Water Heaters with Input Ratings of 75,000 Btu per Hour or Less; 2019 (Reaffirmed 2024).
B. ANSI Z21.10.3 - Gas-Fired Water Heaters, Volume III, Storage Water Heaters with Input Ratings Above 75,000 Btu per Hour, Circulating and Instantaneous; 2019 (Reaffirmed 2024).
C. ASHRAE Std 90.1 I-P - Energy Standard for Buildings Except Low-Rise Residential Buildings; Most Recent Edition Adopted by Authority Having Jurisdiction, Including All Applicable Amendments and Supplements.

1.03 SUBMITTALS

A. See Section 013000 - Administrative Requirements for submittals procedures.
B. Product Data:
   1. Provide dimension drawings of water heaters indicating components and connections to other equipment and piping.
   2. Provide electrical characteristics and connection requirements.
C. Operation and Maintenance Data: Include operation, maintenance, and inspection data, replacement part numbers and availability, and service depot location and telephone number.
D. Warranty Documentation: Submit manufacturer warranty and ensure that forms have been completed in Owner's name and registered with manufacturer.
E. Maintenance Materials: Furnish the following for Owner's use in maintenance of project.
   1. See Section 016000 - Product Requirements for additional provisions.

1.04 QUALITY ASSURANCE

A. Certifications:
   1. Water Heaters: NSF approved.
   2. Gas Water Heaters: ANSI Z21.10.1 and ANSI Z21.10.3.

1.05 DELIVERY, STORAGE, AND HANDLING

A. Provide temporary inlet and outlet caps. Maintain caps in place until installation.

1.06 WARRANTY

A. See Section 017800 - Closeout Submittals for additional warranty requirements.

PART 2 PRODUCTS

2.01 WATER HEATERS

A. REFER TO SCHEDULES

PART 3 EXECUTION

3.01 INSTALLATION

A. Install plumbing equipment in accordance with manufacturer's instructions, as required by code, and complying with conditions required for applicable certifications.
B. Electrical Work: Provide automatic control and protective devices with associated wiring to interconnect related interfaced devices required for specified operation.
C. Coordinate system, equipment, and piping work with applicable electrical, fuel, gas, vent, drain, and waste support interconnections as included or provided by other trades.

END OF SECTION 223000

SECTION 231123 - FACILITY NATURAL-GAS PIPING

PART 1 GENERAL

1.01 SECTION INCLUDES

A. Pipe, pipe fittings, valves, and connections for natural gas piping systems.

1.02 RELATED REQUIREMENTS

A. Section 083100 - Access Doors and Panels.
B. Section 099113 - Exterior Painting.
C. Section 099123 - Interior Painting.
D. Section 220516 - Expansion Fittings and Loops for Plumbing Piping.

1.03 REFERENCE STANDARDS

A. ANSI Z21.18/CSA 6.3 - Gas Appliance Pressure Regulators; 2019.
B. ANSI Z21.80/CSA 6.22 - Line Pressure Regulators; 2019.
C. ANSI Z223.1 - National Fuel Gas Code; 2024.
D. ASME BPVC-IX - Boiler and Pressure Vessel Code, Section IX - Qualification Standard for Welding, Brazing, and Fusing Procedures; Welders; Brazers; and Welding, Brazing, and Fusing Operators; 2023.
E. ASME B16.3 - Malleable Iron Threaded Fittings: Classes 150 and 300; 2021.
F. ASME B31.1 - Power Piping; 2024.
G. ASME B31.9 - Building Services Piping; 2020.
H. ASTM A53/A53M - Standard Specification for Pipe, Steel, Black and Hot-Dipped, Zinc-Coated, Welded and Seamless; 2022.
I. ASTM A123/A123M - Standard Specification for Zinc (Hot-Dip Galvanized) Coatings on Iron and Steel Products; 2017.
J. ASTM A234/A234M - Standard Specification for Piping Fittings of Wrought Carbon Steel and Alloy Steel for Moderate and High Temperature Service; 2023a.
K. AWWA C105/A21.5 - Polyethylene Encasement for Ductile-Iron Pipe Systems; 2018.
L. MSS SP-78 - Gray Iron Plug Valves, Flanged and Threaded Ends; 2011.
M. MSS SP-110 - Ball Valves Threaded, Socket-Welding, Solder Joint, Grooved and Flared Ends; 2010, with Errata .

1.04 SUBMITTALS

A. See Section 013000 - Administrative Requirements, for submittal procedures.
B. Product Data: Provide data on pipe materials, pipe fittings, valves, and accessories. Provide manufacturers catalog information. Indicate valve data and ratings.
C. Welder Certificate: Include welders certification of compliance with ASME BPVC-IX.
D. Shop Drawings: For non-penetrating rooftop supports, submit detailed layout developed for this project, with design calculations for loadings and spacings.

1.05 QUALITY ASSURANCE

A. Perform work in accordance with applicable codes.
B. Valves: Manufacturer's name and pressure rating marked on valve body.
C. Welding Materials and Procedures: Comply with ASME BPVC-IX and applicable state labor regulations.
D. Welder Qualifications: Certified in accordance with ASME BPVC-IX.
E. Identify pipe with marking including size, ASTM material classification, and ASTM specification.

1.06 DELIVERY, STORAGE, AND HANDLING

A. Accept valves on site in shipping containers with labeling in place. Inspect for damage.
B. Provide temporary protective coating on cast iron and steel valves.
C. Provide temporary end caps and closures on piping and fittings. Maintain in place until installation.
D. Protect piping systems from entry of foreign materials by temporary covers, completing sections of the work, and isolating parts of completed system.

1.07 FIELD CONDITIONS

A. Do not install underground piping when bedding is wet or frozen.

PART 2 PRODUCTS

2.01 NATURAL GAS PIPING, BURIED BEYOND 5 FEET (1500 MM) OF BUILDING

A. Steel Pipe: ASTM A53/A53M, Schedule 40 black.
   1. Fittings: ASTM A234/A234M, wrought steel welding type, with AWWA C105/A21.5 polyethylene jacket or double layer, half-lapped 10 mil (0.25 mm) polyethylene tape.
   2. Joints: ASME B31.1, welded.

2.02 NATURAL GAS PIPING, BURIED WITHIN 5 FEET (1500 MM) OF BUILDING

A. Steel Pipe: ASTM A53/A53M, Schedule 40 black.
   1. Fittings: ASTM A234/A234M, wrought steel welding type.
   2. Joints: ANSI Z223.1, welded.
   3. Jacket: AWWA C105/A21.5 polyethylene jacket or double layer, half-lapped 10 mil (0.25 mm) polyethylene tape.

2.03 NATURAL GAS PIPING, ABOVE GRADE

A. Steel Pipe: ASTM A53/A53M, Schedule 40 black.
   1. Fittings: ASME B16.3, malleable iron, or ASTM A234/A234M, wrought steel welding type.
   2. Joints: Threaded or welded to ASME B31.1.

2.04 PIPE HANGERS AND SUPPORTS

A. Provide hangers and supports that comply with MSS SP-58.
   1. If type of hanger or support for a particular situation is not indicated, select appropriate type using MSS SP-58 recommendations.
   2. Overhead Supports: Individual steel rod hangers attached to structure or to trapeze hangers.
   3. Trapeze Hangers: Welded steel channel frames attached to structure.
   4. Vertical Pipe Support: Steel riser clamp.
   5. Floor Supports: Concrete pier or steel pedestal with floor flange; fixture attachment.
   6. Rooftop Supports for Low-Slope Roofs: Steel pedestals with bases that rest on top of roofing membrane, not requiring any attachment to the roof structure and not penetrating the roofing assembly, with support fixtures as specified; and as follows:
      a. Bases: High density polypropylene.
      b. Base Sizes: As required to distribute load sufficiently to prevent indentation of roofing assembly.
      c. Steel Components: Stainless steel, or carbon steel hot-dip galvanized after fabrication in accordance with ASTM A123/A123M.
      d. Attachment/Support Fixtures: As recommended by manufacturer, same type as indicated for equivalent indoor hangers and supports; corrosion resistant material.
      e. Height: Provide minimum clearance of 6 inches (150 mm) under pipe to top of roofing.

2.05 BALL VALVES

A. Construction, 4 Inches (100 mm) and Smaller: MSS SP-110, Class 150, 400 psi (2760 kPa) CWP, bronze or ductile iron body, 304 stainless steel or chrome plated brass ball, regular port, Teflon seats and stuffing box ring, blow-out proof stem, lever handle with balancing stops, solder, threaded, or grooved ends with union.

2.06 PLUG VALVES

A. Construction 2-1/2 Inches (65 mm) and Larger: MSS SP-78, 175 psi (1200 kPa) CWP, cast iron body and plug, pressure lubricated, Teflon or Buna N packing, flanged or grooved ends. Provide lever operator with set screw.

2.07 LINE PRESSURE REGULATORS AND APPLIANCE REGULATORS INDICATORS

A. Compliance Requirements:
   1. Appliance Regulator: ANSI Z21.18/CSA 6.3.

2. Line Pressure Regulator: ANSI Z21.80/CSA 6.22.

B. Materials in Contact With Gas:
1. Housing: Aluminum, steel (free of non-ferrous metals).
2. Seals and Diaphragms: NBR-based rubber.

C. Maximum Inlet Operating Pressure: 10 psi (68.9 kPa).
1. Appliance Regulator: 10 psi (68.9 kPa).
2. Line Pressure Regulator: 10 psi (68.9 kPa).

D. Maximum Body Pressure: 10 psi (1000 mbar).

E. Output Pressure Range: 1 inch wc (2.5 mbar) to 80 inch wc (200 mbar).

PART 3 EXECUTION

3.01 PREPARATION

A. Ream pipe and tube ends. Remove burrs. Bevel plain end ferrous pipe.

B. Remove scale and dirt, on inside and outside, before assembly.

C. Prepare piping connections to equipment with flanges or unions.

3.02 INSTALLATION

A. Install in accordance with manufacturer's instructions.

B. Route piping in orderly manner and maintain gradient. Route parallel and perpendicular to walls.

C. Install piping to maintain headroom, conserve space, and not interfere with use of space.

D. Group piping whenever practical at common elevations.

E. Install piping to allow for expansion and contraction without stressing pipe, joints, or connected equipment. Refer to Section 220516.

F. Provide clearance in hangers and from structure and other equipment for installation of insulation and access to valves and fittings.

G. Provide access where valves and fittings are not exposed.
1. Coordinate size and location of access doors with Section 083100.

H. Provide support for utility meters in accordance with requirements of utility companies.

I. Prepare exposed, unfinished pipe, fittings, supports, and accessories ready for finish painting.

J. Install valves with stems upright or horizontal, not inverted.

K. Sleeve pipes passing through partitions, walls and floors.

L. Inserts:
1. Provide inserts for placement in concrete formwork.
2. Provide inserts for suspending hangers from reinforced concrete slabs and sides of reinforced concrete beams.

M. Pipe Hangers and Supports:
1. Install in accordance with ASME B31.9.

2. Support horizontal piping as indicated.
3. Install hangers to provide minimum 1/2 inch (15 mm) space between finished covering and adjacent work.
4. Place hangers within 12 inches (300 mm) of each horizontal elbow.
5. Support vertical piping at every other floor. Support riser piping independently of connected horizontal piping.
6. Where several pipes can be installed in parallel and at same elevation, provide multiple or trapeze hangers.
7. Prime coat exposed steel hangers and supports. Hangers and supports located in crawl spaces, pipe shafts, and suspended ceiling spaces are not considered exposed.
    a. Painting of interior piping systems and components is specified in Section 099123.
    b. Painting of exterior piping systems and components is specified in Section 099113.

3.03 APPLICATION

A. Install unions downstream of valves and at equipment or apparatus connections.
B. Install brass male adapters each side of valves in copper piped system. Solder adapters to pipe.
C. Install ball valves for shut-off and to isolate equipment, part of systems, or vertical risers.
D. Install ball valves for throttling, bypass, or manual flow control services.
E. Provide plug valves in natural gas systems for shut-off service.

END OF SECTION 231123

PLUMBING BASIC SYMBOLS

(NOT ALL SYMBOLS ARE NECESSARILY USED ON THIS PROJECT)

- EXISTING PIPING
- EXISTING PIPING TO BE REMOVED
- AB — PIPING TO BE ABANDONED
- NEW SOIL, WASTE OR SANITARY PIPING
- VENT PIPING (SANITARY)
- PIPING BELOW SLAB
- DOMESTIC COLD WATER PIPING
- DOMESTIC HOT WATER PIPING (120°)
- DOMESTIC HOT WATER CIRCULATION PIPING
- PIPING w/FREEZE PROTECTION CABLE & INSULATION
- ARROW INDICATES DIRECTION OF FLOW
- CA — COMPRESSED AIR PIPING
- GAS PIPING
- EJ — EJECTOR DISCHARGE PIPING
- IW — INDIRECT WASTE PIPING
- PD — PUMP DISCHARGE PIPING
- SD — SUMP PUMP DISCHARGE PIPING
- ST — STORM WATER DRAINAGE PIPING
- T — TEMPERED WATER PIPING
- DISCONNECT FROM EXISTING
- CONNECT TO EXISTING
- SHOCK ARRESTOR
- X — FLEXIBLE CONNECTION
- (H) (L) — EXPANSION LOOP SIZE
- HOSE BIBB
- WALL HYDRANT (EXIST./NEW)
- FRESH AIR INLET
- CLEAN OUT/PLUGGED OUTLET
- CAPPED OUTLET
- CLEAN-OUT DECK PLATE
- P-TRAP
- VACUUM BREAKER
- BOTTOM PIPE CONNECTION
- TOP PIPE CONNECTION
- SIDE CONNECTION
- PIPE DOWN/DROP
- PIPE RISE/UP
- PIPE SLOPE
- VALVE IN VERTICAL
- UNION
- REDUCER
- WATER PROOF SLEEVE
- SLEEVE
- PRESSURE GAUGE w/GAUGE COCK
- TEMPERATURE GAUGE
- FLOOR DRAIN
- ROOF DRAIN
- PUMP
- M — WATER METER
- ABD — AUTOMATIC BALL DRIP
- VENT THRU ROOF
- TRAP

EXIST.	NEW	
		TEMPERATURE AND PRESSURE RELIEF VALVE
		PLUG VALVE
		MIXING VALVE
		RELIEF VALVE
		BALL VALVE
LS	LS	BALL VALVE w/LOCK SHIELD
		GATE VALVE
		GLOBE VALVE
		OUTSIDE SCREW & YOKE (OS & Y) VALVE
		CHECK VALVE
		PRESSURE REDUCING VALVE (PRV)
		SOLENOID VALVE
		FLOAT VALVE
		Y STRAINER w/BLOW-OFF VALVE

- RPZ — REDUCED PRESSURE ZONE BACKFLOW PREVENTER ASSEMBLY
- DCV — DOUBLE CHECK VALVE BACKFLOW PREVENTER ASSEMBLY
- BVA — BALANCING VALVE ASSEMBLY
- F/X — RISER DESIGNATION
- RISER SERVICE
- RISER NUMBER

PLUMBING ABBREVIATIONS

(NOT ALL SYMBOLS ARE NECESSARILY USED ON THIS PROJECT)

AD	AREA DRAIN
AFF	ABOVE FINISHED FLOOR
AHJ	AUTHORITY HAVING JURISDICTION
BLDG	BUILDING
BOP	BOTTOM OF PIPE
CO	CLEANOUT
CODP	CLEANOUT DECK PLATE
CM	COFFEE MAKER
CV	CHECK VALVE
CVO	CAPPED AND VALVED OUTLET
CW	COLD WATER
CLG	CEILING
CONN	CONNECT
CONT	CONTINUATION
DIA	DIAMETER
DN	DOWN (PENETRATES FLOOR SLAB)
DR	DRAIN
DWG	DRAWING
(E)	EXISTING
(ER)	EXISTING TO BE REMOVED
(ERR)	EXISTING TO BE REMOVED & RELOCATED
EJ DIS	EJECTOR DISCHARGE
EL	ELEVATION
EWC	ELECTRIC WATER COOLER
FAI	FRESH AIR INLET
FD	FLOOR DRAIN
FU	FIXTURE UNIT
FL	FLOOR
FLH	FLOOR HYDRANT
FT	FEET
GC	GENERAL CONTRACTOR
GAL	GALLONS
GPM	GALLONS PER MINUTE
GW	GREASE WASTE
HB	HOSE BIBB
HCLG	HUNG CEILING
HW	HOT WATER
HWR	HOT WATER RETURN
ID	INSIDE DIAMETER
IW	INDIRECT WASTE
IN	INCH
JS	JANITOR'S SINK
LAV	LAVATORY
MAP	MEDICAL GAS ALARM PANEL
MAX	MAXIMUM
MIN	MINIMUM
MR	MOP RECEPTOR
(N)	NEW
NC	NORMALLY CLOSED
NIC	NOT IN THIS CONTRACT
NO	NORMALLY OPEN
NTS	NOT TO SCALE
OD	OUTSIDE DIAMETER
OS&Y	OUTSIDE SCREW & YOKE GATE VALVE
PC	PLUMBING CONTRACTOR
PD	PUMP DISCHARGE
PO	PLUGGED OUTLET
PRV	PRESSURE REDUCING VALVE
PSI	POUNDS PER SQUARE INCH (GAUGE)
RD	ROOF DRAIN
(RE)	RELOCATED EXISTING
(RRO)	EXISTING TO BE REMOVED AND RETURNED TO OWNER
SA	SHOCK ARRESTOR
SAN	SANITARY
SD	STORM DRAIN
SH	SHOWER
SK	SINK
SLV	SLEEVE
SQ FT	SQUARE FOOT
ST	STORM
TYP	TYPICAL
UON	UNLESS OTHERWISE NOTED
UP	(PENETRATES FLOOR SLAB)
UR	URINAL
V	VENT
VB	VACUUM BREAKER
VTR	VENT THROUGH ROOF
W	WASTE
WC	WATER CLOSET
WCO	WALL CLEANOUT
WH	WALL HYDRANT
ZCVB	ZONE CONTROL VALVE BOX

LPSC = LOW PRESSURE STEAM CONDENSATE
LPSS = LOW PRESSURE STEAM SUPPLY
DCWS = DOMESTIC COLD WATER SUPPLY
DHWS = DOMESTIC HOT WATER SUPPLY
DHWR = DOMESTIC HOT WATER RETURN
HHWR = HYDRONIC HOT WATER RETURN
HHWS = HYDRONIC HOT WATER SUPPLY
HPSS = HIGH PRESSURE STEAM SUPPLY

PLUMBING GENERAL NOTES

1. CONTRACTOR SHALL PROVIDE AND PAY ALL FEES AND PERMITS. ALL WORK SHALL BE PERFORMED IN ACCORDANCE WITH ALL APPLICABLE CODES AND REGULATIONS INCLUDING BUT NOT LIMITED TO INTERNATIONAL, NATIONAL, CITY, STATE, LOCAL CODES AND ORDINANCES WHICH MAY BE IN EFFECT. ALL PLUMBING MATERIALS, INSTALLATION PROCEDURES AND SYSTEM LAYOUTS SHALL BE APPROVED BY ALL APPLICABLE CODE ENFORCEMENT AUTHORITIES HAVING JURISDICTION, AND IT SHALL BE THE PLUMBING CONTRACTOR'S RESPONSIBILITY TO OBTAIN AND PAY FOR ALL NECESSARY PERMITS AND APPROVALS FOR THIS INSTALLATION.
2. WHERE THERE IS A DISCREPANCY BETWEEN MATERIAL OR EQUIPMENT IN THE DRAWINGS AND/OR SPECIFICATIONS, THE PLUMBING CONTRACTOR SHALL ASSUME THE MORE STRINGENT, HIGHER QUALITY AND MORE EXPENSIVE OPTION FOR BIDDING.
3. DRAWINGS ARE DIAGRAMMATIC AND INTENDED TO SHOW APPROXIMATE LOCATIONS. CONTRACTOR SHALL INSTALL ALL WORK WITHOUT CONFLICT WITH OTHER TRADES AND MAKE ALTERATIONS AS REQUIRED WITHOUT ADDITIONAL COST TO OWNER. CONTRACTOR SHALL INCLUDE ALL NEEDED OFFSETS, CHANGES IN DIRECTION, TRANSITIONS, COLLARS, FITTINGS, ETC. NEEDED FOR COMPLETE AND OPERATIONAL SYSTEMS.
4. ALL COMPONENTS OF THE DOMESTIC WATER SYSTEM SHALL CONFORM TO THE FEDERAL "REDUCTION OF LEAD IN DRINKING WATER ACT" AS DEFINED PER SDWA IN SECTION 1417(D). THE WETTED AREA EXPOSED TO DRINKING WATER SHALL BE LEAD FREE.
5. COORDINATE WORK WITH OTHER TRADES SO THAT ALL COMPONENTS SHALL BE INSTALLED IN THE PROPER PLACE AT THE PROPER TIME. COORDINATE WITH ELECTRICAL CONTRACTOR TO ASSURE DOMESTIC WATER AND ELECTRICAL WIRING ARE NOT INSTALLED IN SAME STUD BAY IN WALLS AND CEILINGS.
6. SANITARY PIPING SHALL BE SLOPED ON A DOWNWARD PITCH AT A MINIMUM OF 1/4" PER FOOT FOR 2" SIZES AND LESS. PIPING 3" AND LARGER SHALL BE SLOPED AT 1/8" PER FOOT, AND IN ALL CASES CONFORMING TO JURISDICTIONAL CODE REQUIREMENTS.
7. FOR SOLDERED JOINTS, CLEAN THE ENDS OF ALL COPPER TUBING BEFORE ASSEMBLY. APPLY FLUX AND TIN THE ENDS OF TUBING 2 INCHES AND LARGER.
8. ALL PIPING ON EXTERIOR WALLS SHALL BE PROTECTED FROM FREEZING.
9. PROVIDE DIELECTRIC FITTINGS WHEN JOINING DISSIMILAR METALS.
10. SLEEVES SHALL BE SCHEDULE 40 STEEL AND SHALL BE TWO PIPE SIZES LARGER THAN THE SYSTEM PIPE. SLEEVES SHALL BE LOCATED WHERE PIPE PASSES THROUGH WALLS, FLOORS OR PARTITIONS. ANNULAR SPACE BETWEEN SLEEVE AND PIPE SHALL BE SEALED WATER TIGHT AND FIRE STOPPED (IF APPLICABLE) TO ACHIEVE AN HOURLY RATING EQUAL OR GREATER TO THAT OF THE ASSEMBLY BEING PENETRATED.
11. ALL MATERIALS AND EQUIPMENT SHALL BE NEW AND BE INSTALLED IN STRICT ACCORDANCE WITH THE MANUFACTURER'S RECOMMENDATIONS AND DETAILS.
12. ALL PIPING SHALL BE INSTALLED IN ACCORDANCE WITH THE BEST PRACTICES OF THE TRADE AND THE LATEST CODE REQUIREMENTS AND THE AUTHORITY HAVING JURISDICTION. SYSTEM MATERIALS SHALL BE UNIFORM THROUGHOUT THE BUILDING.
13. ALL EQUIPMENT AND MATERIALS SHALL, AS A MINIMUM, HAVE A WORKING PRESSURE AS DETERMINED BY CODES, ASME (OR SIMILAR OTHER BODY) AND OF NOT LESS THAN 125 PSI.
14. CLEAN ALL PIPE BEFORE ERECTION. REAM ALL PIPE ENDS AFTER CUTTING.
15. FOR SCREWED JOINTS APPLY NON-CORROSIVE, NON-HARDENING TEFLON PIPE TAPE OR SUITABLE COMPOUND TO MALE THREADS ONLY. CAULKING AND PACKING OF THREADS IS PROHIBITED.
16. INSTALL EXPOSED PIPE LINES PARALLEL WITH BUILDING WALLS OR STRUCTURE. DO NOT EMBED PIPING IN CINDER FILL, NOR INSTALL WHERE THERE IS A POSSIBILITY OF FREEZING.
17. PITCH PIPING TO PERMIT AIR VENTING THROUGH THE FIXTURES. ALLOW FOR EXPANSION AND COMPLETE LOW POINT DRAINAGE.
18. IT IS THE RESPONSIBILITY OF THE PLUMBING CONTRACTOR TO REVIEW THESE PLANS AND SPECIFICATIONS, AS WELL AS THE RELATED HVAC, FIRE PROTECTION, ELECTRICAL, STRUCTURAL, ARCHITECTURAL, INTERIOR DECOR AND SITE ENGINEERING DRAWINGS TO BECOME FAMILIAR WITH THE FULL PROJECT SCOPE. IN ADDITION, THIS CONTRACTOR MUST COORDINATE WITH AN OWNER REPRESENTATIVE TO FULLY UNDERSTAND ALL REQUIREMENTS WHICH MAY NOT BE SPECIFIED HEREIN AND WHICH THE OWNER MAY CONSIDER PART OF THIS CONTRACT. DURING THE COURSE OF CONSTRUCTION COORDINATION AND ACTUAL CONSTRUCTION, IT IS THE RESPONSIBILITY OF THE PLUMBING CONTRACTOR TO WORK CLOSELY WITH ALL ACCOMPANYING CONTRACTORS AND TRADESMEN IN ORDER TO ENSURE A SMOOTH RUNNING AND CAREFULLY COORDINATED INSTALLATION.
19. THE PLUMBING CONTRACTOR SHALL VISIT THE SITE AND NOTE ALL EXISTING CONDITIONS AS WELL AS ALL CONDITIONS TO BE MET, PRIOR TO BID SUBMISSION. LACK OF A THOROUGH UNDERSTANDING OF THE PROJECT SCOPE AND CONDITIONS SHALL NOT CONSTITUTE AN EXCUSE FOR ERRORS OR OMISSIONS, NOR FOR A REQUEST FOR EXTRA COMPENSATION.
20. THE PLUMBING CONTRACTOR SHALL PROVIDE A COMPLETE SET OF RECORD "AS-BUILT" DRAWINGS INDICATING THE PRECISE LOCATION OF ALL SYSTEMS, EQUIPMENT CONCEALED OR EMBEDDED PIPING, PIPING CONNECTIONS AND ACCESS DOORS. THESE DRAWINGS SHALL ALSO INCLUDE ALL CHANGES AND DEVIATIONS FROM BID DOCUMENTS.
21. RUN ALL DOMESTIC, WASTE, VENT AND GAS PIPING AS HIGH AS POSSIBLE THROUGHOUT ENTIRE BUILDING. INSTALL LONG RUNS OF PIPING WITHIN STEEL (JOIST) SPACE AND OTHER PIPING TIGHT TO BOTTOM OF STEEL. COORDINATE AND VERIFY WITH OTHER CONTRACTORS AS NOT TO INTERFERE WITH DUCTWORK, FIRE PROTECTION PIPING, LIGHTING SYSTEMS, ETC.
22. ALL EXPOSED HORIZONTAL AND VERTICAL PIPING SHALL BE INSTALLED IN A NEAT ARRANGEMENT IN LOCATIONS WHICH ARE THE MOST INCONSPICUOUS. VERTICAL DROP FINAL LOCATIONS SHALL BE COORDINATED AND RUN WITHIN CHASES, WALLS, SOFFITS WITH OTHER MECHANICAL / ELECTRICAL FEEDS. ALL SUCH LOCATIONS ARE TO BE REVIEWED WITH AN OWNER REPRESENTATIVE AND ARCHITECT PRIOR TO INSTALLATION.
23. FINAL CONNECTIONS TO ALL GAS FIRED APPLIANCES TO BE BY THE PLUMBING CONTRACTOR, REGARDLESS OF WHO PROVIDES APPLIANCE. THIS SHALL INCLUDE BUT NOT BE LIMITED TO HVAC EQUIPMENT, COOKING EQUIPMENT, EMERGENCY GENERATORS AND DOMESTIC HOT WATER HEATERS. EACH PIECE OF EQUIPMENT SHALL BE PROVIDED WITH A DIRT LEG, LUBRICATED PLUG VALVE, UNION, GAS SHUT-OFF VALVE AND A FLEXIBLE STAINLESS STEEL CONNECTION.
24. DOMESTIC WATER HEATER TEMPERATURE / PRESSURE RELIEF VALVES SHALL BE PIPED FULL SIZE TO THE NEAREST APPROVED STANDPIPE OR FLOOR DRAIN. THIS REQUIREMENT SHALL BE APPLICABLE TO ALL DOMESTIC WATER HEATERS.
25. ALL HAND SINKS SHALL HAVE IN-LINE WATER TEMPERING VALVES INSTALLED SO AS TO BE EASILY ACCESSIBLE. THESE TEMPERING VALVES SHALL BE SET TO DELIVER HOT WATER AT 105°F.
26. PRIOR TO INSTALLING SYSTEMS, THE PLUMBING CONTRACTOR SHALL MEET WITH AN OWNER'S REPRESENTATIVE TO FIELD VERIFY THE EXACT LOCATION OF ALL PROPOSED EQUIPMENT WHICH MAY NOT BE CLEARLY INDICATED ON THE DRAWINGS.
27. REFER TO ARCHITECTURAL PLANS FOR LOCATIONS OF FIRE WALLS AND WALLS WHICH REQUIRE SEALING. PLUMBING CONTRACTOR SHALL BE RESPONSIBLE FOR SEALING ALL FLOOR AND WALL PENETRATIONS WITH FIRE RATED SEALANT BEFORE FINAL PAYMENT.
28. PLUMBING CONTRACTOR SHALL PROVIDE AND INSTALL ALL INDIRECT WASTE PIPING – SHALL BE COPPER WITH SOLDER JOINTS.
29. PLUMBING CONTRACTOR SHALL RUN ALL PIPING TO AVOID REINFORCING AT ALL COLUMN LINES.
30. ALL WORK SHALL BE INSTALLED IN A NEAT AND WORKMAN-LIKE MANNER IN ACCORDANCE WITH LOCAL CODES AND ALL AUTHORITIES HAVING JURISDICTION.
31. VALVES SHALL NOT BE INSTALLED WITH THE OPERATING HANDLE POINTING DOWNWARD. RUN PIPING GENERALLY PARALLEL TO THE AXIS OF THE BUILDING, ARRANGED TO CONFORM TO THE BUILDING REQUIREMENTS AND TO SUIT THE NECESSITIES OF CLEARANCE OF DUCTS, FLUES, CONDUITS AND WORK OF OTHER TRADES AND CLOSE TO CEILING OR OTHER CONSTRUCTION AS PRACTICAL, FREE OF TRAPS OR BENDS.
32. PLUMBING CONTRACTOR SHALL REPLACE ANY PIPING SYSTEM AND COMPONENTS WHICH DO NOT PASS TESTING PROCEDURES SPECIFIED AND RETEST REPAIRED PORTIONS OF THE SYSTEM.
33. PLUMBING CONTRACTOR SHALL MAKE FINAL CONNECTIONS TO ALL PLUMBING EQUIPMENT, EQUIPMENT SUPPLIED BY OTHERS, INCLUDING REQUIRED FAUCETS, STOPS, VALVES, FITTINGS, TRAPS, ETC.
34. PLUMBING CONTRACTOR SHALL INSTALL PIPING SO AS NOT TO ENCROACH ON REQUIRED CLEARANCES ABOVE ANY ELECTRIC PANEL. NO PIPING SHALL BE INSTALLED DIRECTLY OVER ELECTRICAL PANELS AND NO PIPING SHALL BE INSTALLED WITH THE BOTTOM AT LESS THAN 66" ABOVE THE 4'-0" SPACE DIRECTLY IN FRONT OF ANY ELECTRIC PANELS.
35. PIPING HANGERS SHALL BE SPACED SO AS TO PREVENT SAG AND PERMIT PROPER DRAINAGE AND SHALL NOT BE SPACED MORE THAN EIGHT FEET APART UNLESS A GREATER SPACE IS DEFINITELY INDICATED ON THE DRAWINGS. A HANGER SHALL BE PLACED WITHIN (1) FOOT OF EACH HORIZONTAL ELBOW. HANGERS SHALL BE SIZED TO FIT OVER INSULATION AND BE PROVIDED WITH AN INSULATION SHIELDS.
36. THE INSTALLATION OF ALL INSULATION SHALL BE PERFORMED BY AN EXPERIENCED CRAFTSMAN IN A NEAT WORKMAN-LIKE MANNER AND SHALL BE IN ACCORDANCE WITH THE MANUFACTURER'S PUBLISHED RECOMMENDATIONS FOR SERVICE INTENDED.
37. ALL MATERIALS OF INSULATION SHALL BE OF THE TYPE AND QUALITY AS MANUFACTURED BY ARMSTRONG, CERTAINTEED, OWENS-CORNING OR SCHULLER.
38. ALL MATERIAL AND EQUIPMENT SPECIFIED TO BE INSULATED SHALL BE THOROUGHLY TESTED AND APPROVED PRIOR TO APPLYING THE INSULATION.
39. DOMESTIC WATER PIPING SYSTEM

    UPON COMPLETION OF THE ROUGH-IN AND BEFORE INSULATION OR SETTING OF FIXTURES, DOMESTIC HOT AND COLD WATER PIPING SYSTEMS SHALL BE TESTED AT A HYDROSTATIC PRESSURE OF 1-1/2 TIMES THE ACTUAL WATER PRESSURE BUT NOT LESS THAN 100 PSIG AND PROVEN TIGHT AT THIS PRESSURE FOR NOT LESS THAN 3 HOURS.
40. CLEANING OF PIPING SYSTEMS

    FOLLOWING THE COMPLETION OF SYSTEM TESTS, ALL PIPING SYSTEMS SHALL BE THOROUGHLY CLEANED BY THE CONTRACTOR BY FLUSHING WITH WATER OR AS OTHERWISE SPECIFIED. ALL DIRT, SCALE, OIL, GREASE AND FOREIGN SUBSTANCES WHICH MAY HAVE ACCUMULATED IN THE SYSTEMS DURING INSTALLATION SHALL BE COMPLETELY REMOVED.
41. STERILIZATION OF POTABLE WATER SYSTEMS

    A. BEFORE BEING PLACED IN SERVICE, THE COMPLETE DOMESTIC HOT AND COLD WATER PIPING WITHIN THE BUILDING SHALL BE STERILIZED IN ACCORDANCE WITH THE LATEST ISSUE OF AWWA SPECIFICATION C-651 AND PER NATIONAL STANDARD PLUMBING CODE SECTION 10.9. THE PIPING SHALL BE FILLED WITH A WATER-CHLORINE SOLUTION CONTAINING AT LEAST 50 PARTS PER MILLION OF CHLORINE AND SHALL BE VALVED OFF FOR 24 HOURS OR FILLED WITH A WATER-CHLORINE SOLUTION CONTAINING AT LEAST 200 PARTS PER MILLION OF CHLORINE AND ALLOWED TO STAND FOR AT LEAST 3 HOURS. FOLLOWING THE ALLOWED STANDING TIME, THE SYSTEM SHALL BE FLUSHED WITH POTABLE WATER UNTIL NO CHLORINE REMAINS IN THE SYSTEM.

    B. PRIOR TO STERILIZATION, SYSTEMS SHALL BE LEAK TESTED AND ALL DIRT AND FOREIGN MATTER SHALL BE REMOVED BY A THOROUGH FLUSHING WITH WATER.
42. ENGAGE A FACTORY-AUTHORIZED SERVICE REPRESENTATIVE TO PERFORM STARTUP SERVICES. COMPLETE INSTALLATION AND STARTUP CHECKS SHALL BE ACCORDING TO MANUFACTURER'S WRITTEN INSTRUCTIONS AND STARTUP REPORTS SHALL BE PROVIDED TO ARCHITECT/ENGINEER FOLLOWING COMPLETION. STARTUP SHALL BE PROVIDED FOR ALL EQUIPMENT SUPPLIED OR INSTALLED, INCLUDING BUT NOT LIMITED TO THE FOLLOWING:

    A. WATER HEATERS
    B. PUMPS
    C. CONTROLS

PLUMBING DEMOLITION GENERAL NOTES

1. THE CONTRACTOR SHALL INCLUDE IN HIS PRICE ALL COSTS ASSOCIATED WITH REMOVALS AND RELOCATIONS OF PLUMBING WORK AS DESCRIBED ON THE DRAWINGS AND IN THE SPECIFICATIONS WITH ALLOWANCES FOR EXPECTED OR UNFORESEEN DIFFICULTIES WHEN CONCEALED WORK HAS BEEN OPENED. NO CLAIMS FOR ADDITIONAL WORK ASSOCIATED WITH DEMOLITION SHALL BE ACCEPTED, EXCEPT IN CERTAIN CASES CONSIDERED JUSTIFIABLE BY THE OWNER/ENGINEER.
2. ALL DEMOLITION WORK SHALL BE COORDINATED WITH THE OWNER'S REPRESENTATIVE AND ALSO MUST BE COORDINATED WITH ALL ARCHITECTURAL, PLUMBING, MECHANICAL, FIRE PROTECTION, ELECTRICAL AND STRUCTURAL SYSTEMS.
3. EXISTING CONDITIONS, EQUIPMENT, MATERIALS & SIZES ARE SHOWN FOR REFERENCE ONLY. VERIFY EXISTING CONDITIONS & BRING ANY DISCREPANCIES TO THE ENGINEER'S ATTENTION IN WRITING PRIOR TO BID SUBMISSION.
4. THE CONTRACTOR SHALL VISIT THE SITE TO CAREFULLY EXAMINE AND FAMILIARIZE THEMSELVES WITH THE EXISTING CONDITIONS PRIOR TO BIDDING. SUBMISSION OF A PROPOSAL SHALL BE CONSIDERED AS EVIDENCE THAT SUCH AN EXAMINATION HAS BEEN PERFORMED. LATER CLAIMS FOR EXTRA LABOR OR MATERIALS REQUIRED DUE TO DIFFICULTIES ENCOUNTERED SHALL NOT BE RECOGNIZED.
5. ALL SYSTEMS TO BE REMOVED ARE NOT SHOWN. THE CONTRACTOR SHALL BECOME FAMILIAR WITH TOTAL SCOPE OF DEMOLITION WORK PRIOR TO SUBMITTING BID.
6. ALL PIPING BEING ABANDONED SHALL BE CUT BACK AND CAPPED BELOW FINISHED FLOOR, IN WALLS AND ABOVE CEILINGS SO NO PIPING SHALL BE EXPOSED.
7. CONTRACTOR TO PROVIDE DUST PROTECTION TO SATISFACTION OF THE BUILDING OWNER.
8. CONTRACTOR SHALL PATCH AND REPAIR ALL FLOOR, CEILING, WALL, AND ROOF PENETRATIONS, CREATED BY THE INSTALLATION OF NEW, TO MATCH THE EXISTING ADJACENT CONSTRUCTION AND FINISH.
9. ALL EXPOSED OBSOLETE PIPING NOT REQUIRED FOR THIS PROJECT SHALL BE REMOVED.
10. DISPOSE OF ALL MATERIALS AS DIRECTED BY OWNER'S REPRESENTATIVE.
11. ALL RELOCATED PIPING SHALL MATCH EXISTING MATERIALS.
12. THE CONTRACTOR SHALL BE RESPONSIBLE FOR COORDINATING THE DEMOLITION WORK AND NEW WORK WITH THE PHASING REQUIREMENTS OF THIS PROJECT.
13. INDICATED EXISTING PLUMBING, MECHANICAL AND ELECTRICAL SYSTEMS AND COMPONENTS ARE TO BE REMOVED AND RELOCATED AS INDICATED. ENSURE ALL ITEMS HAVE BEEN MADE SAFE PRIOR TO CUTTING OR DISCONNECTING; ELECTRICAL POWER HAS BEEN REMOVED, PRESSURE RELIEVED, TEMPORARY SUPPORTS AND BRACES ARE IN PLACE. ALL REMOVALS ARE TO BE MADE IN A SAFE AND LEGAL MANNER, DISPOSED OF IN APPROPRIATE, LEGAL LOCATIONS OFF THE SITE.
14. THE CONTRACTOR SHALL PERFORM DEMOLITION AND REMOVAL WORK WITH MINIMUM INTERFERENCE WITH FUNCTIONING SYSTEMS. ALL AFFECTED SYSTEMS SHALL BE RECONNECTED AND RESTORED.
15. DEMOLITION AND REMOVAL WORK SHALL BE PERFORMED IN A NEAT AND WORKMANLIKE MANNER. THE CONTRACTOR SHALL PATCH, REPAIR OR OTHERWISE RESTORE ANY DAMAGED INTERIOR OR EXTERIOR BUILDING SURFACE TO ITS ORIGINAL CONDITION. PATCH ALL EXISTING INTERIOR AND EXTERIOR WALLS, LEFT BY DEMOLITION, TO MATCH EXISTING.
16. THE CONTRACTOR SHALL REMOVE ALL PIPING SUPPORTS, ETC. FROM PARTITIONS THAT ARE TO BE REMOVED. WHERE THE REMOVAL OF THESE ITEMS DISRUPTS EXISTING PIPING THAT IS TO REMAIN, THE CONTRACTOR SHALL INSTALL AND PROVIDE BYPASS CONNECTIONS NECESSARY.
17. ALL PIPING WHICH BECOMES EXPOSED DURING THE ALTERATION WORK SHALL BE REMOVED AND REROUTED CONCEALED BEHIND FINISHED SURFACES.
18. ALL PIPING INSULATION THAT IS UNCOVERED AND/OR EXPOSED IN THE AREAS OF WORK THAT IS FOUND TO BE DAMAGED OR MISSING SHALL BE REPAIRED AND REPLACE WITH LIKE INSULATION MATERIALS AND HAVE A SEALED CONTINUOUS VAPOR BARRIER.
19. PORTIONS OF PIPING TO BE REMOVED OR ABANDONED AS A RESULT OF DEMOLITION WORK, BUT WHICH ARE REQUIRED TO REMAIN ACTIVE, SHALL BE CUT AT CONVENIENT LOCATIONS, REROUTED AND RECONNECTED.
20. ARRANGE TO WORK CONTINUOUSLY, INCLUDING OVER TIME, IF REQUIRED, TO ASSURE THAT SYSTEMS SHALL BE SHUT DOWN ONLY DURING THE TIME ACTUALLY REQUIRED TO MAKE THE NECESSARY CONNECTIONS TO THE EXISTING SYSTEMS.
21. THE SHUTDOWN OF EXISTING BUILDING SERVICES SHALL BE COORDINATED WITH THE OWNER. MAKE ARRANGEMENTS AT LEAST 5 BUSINESS DAYS PRIOR TO A SHUTDOWN.
22. CONTRACTOR SHALL COMPLY WITH ALL FEDERAL STATE & LOCAL REQUIREMENTS REGARDING DISPOSAL OF REFRIGERANTS.
23. CONTRACTOR SHALL FIELD VERIFY EXACT LOCATIONS AND CONFIRM EXACT MODIFICATIONS NECESSARY IN THE FIELD.
24. THESE DRAWINGS HAVE BEEN MADE BASED ON A VISUAL INSPECTION OF THE EXISTING SURFACES. SOME ASSUMPTIONS HAVE BEEN MADE AS TO ACTUAL CONSTRUCTION, MATERIALS, AND METHODS. THE CONTRACTOR IS RESPONSIBLE FOR VERIFYING ALL ACTUAL FIELD CONDITIONS AND SHALL NOTIFY THE ARCHITECT OF ANY DISCREPANCIES, CONFLICTS, AND UNFORESEEN CONDITIONS.
25. PLUMBING CONTRACTOR SHALL BE RESPONSIBLE TO DEMO ANY AND ALL WALLS AND/OR CEILINGS AS REQUIRED FOR THE INSTALLATION OF PROPOSED PLUMBING LINES FROM SECOND FLOOR ABOVE. ONCE INSTALLATION IS COMPLETE, THE PLUMBING CONTRACTOR SHALL PATCH AND REPAIR ANY WALLS AND CEILINGS TOUCHED BY THE INSTALLATION. TAPE, SPACKLE AND PREPARE SURFACES TO MATCH EXISTING FINISH. REPLACE ANY CEILING TILES AND/OR PAINT AS REQUIRED TO MATCH EXISTING. COORDINATE ALL PLUMBING WITH ALL TRADES PRIOR TO START OF WORK.

GENERAL FIRESTOPPING NOTE

CONTRACTOR SHALL BE RESPONSIBLE FOR MAINTAINING OR EXCEEDING WALL/CEILING/FLOOR ASSEMBLY RATINGS FOR ALL PENETRATIONS. CONTRACTOR SHALL VERIFY LOCATION AND RATING OF ALL FIRE ASSEMBLIES AND PROVIDE INTUMESCENT COLLARS AT ALL PENETRATIONS AND FIRE RATED CAULKING AS REQUIRED.

Bowman

457 OAKSHADE ROAD
SHAMONG, NJ 08088
(609)-268-0500
WWW.BOWMAN.COM

PROJECT
THE COLLEGE OF NEW JERSEY - EICKHOFF HALL
WATER HEATER REPLACEMENT PROJECT
2000 PENNINGTON ROAD
EWING, NJ 08628

TITLE
PLUMBING COVERSHEET

CONTRACTOR SHALL CHECK & VERIFY ALL DIMENSIONS AND FIELD CONDITIONS PRIOR TO STARTING CONSTRUCTION.

REV:	DESC:	DATE:

DRAWN BY:	RNV
CHECKED BY:	WC
DATE:	03/28/2025
SCALE:	AS NOTED

JOB NO. 25033

P0.00

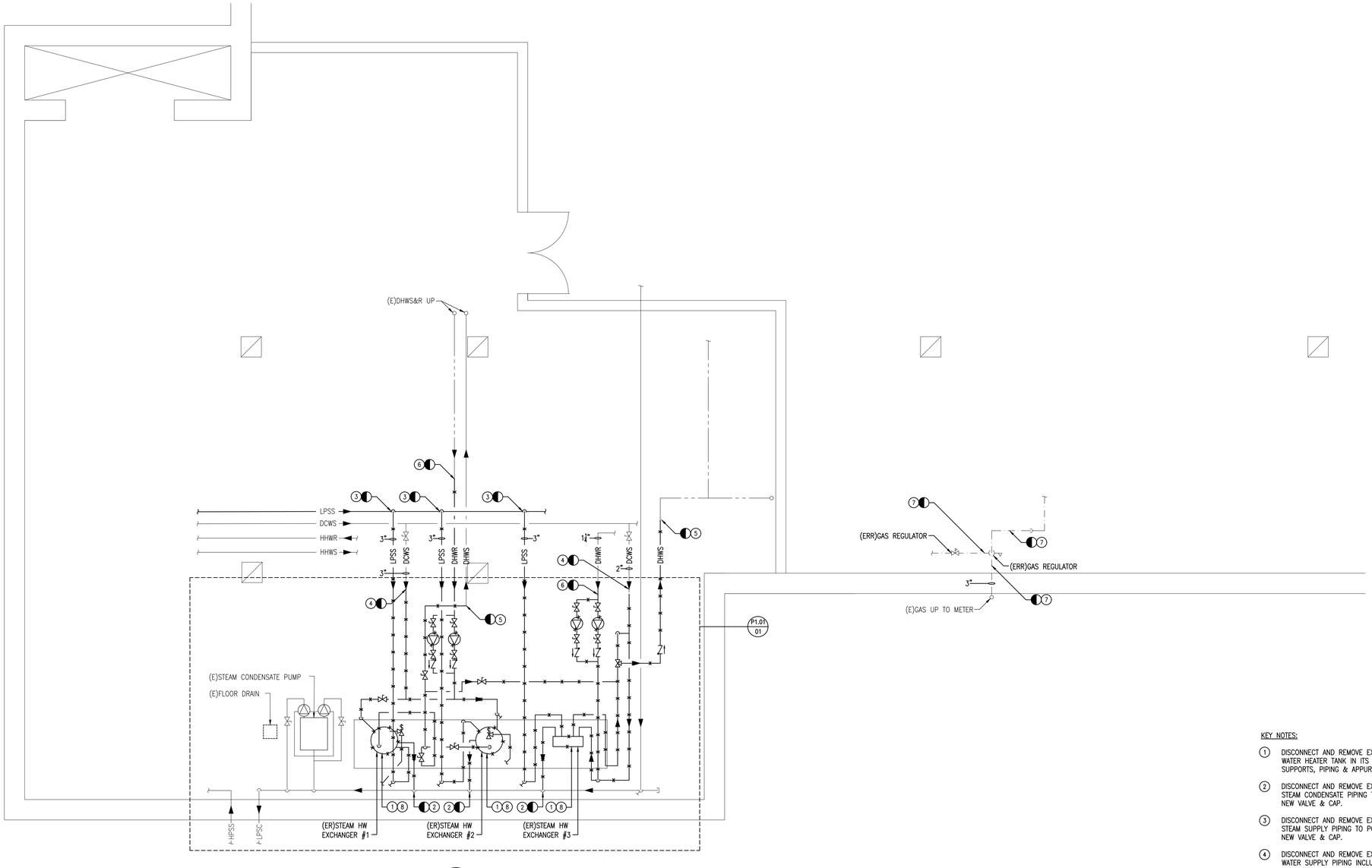

01 PLUMBING – LOWER LEVEL – DEMOLITION

SCALE: 1/4" = 1'-0"

NOTE: CONTRACTOR SHALL FIELD VERIFY ALL EXISTING PIPE SIZES, ROUTING, CONNECTIONS, ETC. AND NOTIFY ENGINEER OF ANY DISCREPANCIES.

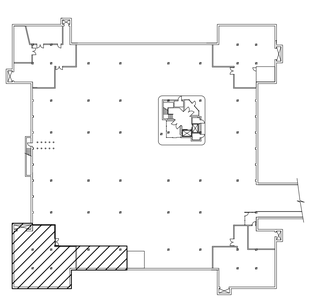

LOWER LEVEL KEY PLAN

SCALE: N.T.S.

KEY NOTES:

1. DISCONNECT AND REMOVE EXISTING STEAM EXCHANGER WATER HEATER TANK IN ITS ENTIRETY, INCLUDING ALL SUPPORTS, PIPING & APPURTENANCES.
2. DISCONNECT AND REMOVE EXISTING LOW PRESSURE STEAM CONDENSATE PIPING TO POINT SHOWN. PROVIDE NEW VALVE & CAP.
3. DISCONNECT AND REMOVE EXISTING LOW PRESSURE STEAM SUPPLY PIPING TO POINT SHOWN. PROVIDE WITH NEW VALVE & CAP.
4. DISCONNECT AND REMOVE EXISTING DOMESTIC COLD WATER SUPPLY PIPING INCLUDING BALL VALVES, CHECK VALVES AND ALL OTHER ASSOCIATED APPURTENANCES TO POINT INDICATED ON PLAN. PREPARE EXISTING DOMESTIC COLD WATER SUPPLY PIPE FOR CONNECTION TO NEW DOMESTIC COLD WATER SUPPLY PIPE, REFER TO NEW WORK PLANS.
5. DISCONNECT AND REMOVE EXISTING DOMESTIC HOT WATER SUPPLY PIPING INCLUDING THERMOSTATIC MIXING VALVE, BALL VALVES, CHECK VALVES AND ALL OTHER ASSOCIATED APPURTENANCES TO POINT INDICATED ON PLAN. PREPARE EXISTING DOMESTIC HOT WATER SUPPLY PIPE FOR CONNECTION TO NEW DOMESTIC HOT WATER SUPPLY PIPE, REFER TO NEW WORK PLANS.
6. DISCONNECT AND REMOVE EXISTING DOMESTIC HOT WATER RETURN PIPING INCLUDING CIRCULATION PUMPS, BALL VALVES, CHECK VALVES AND ALL OTHER ASSOCIATED APPURTENANCES TO POINT INDICATED ON PLAN. PREPARE EXISTING DOMESTIC HOT WATER RETURN PIPE FOR CONNECTION TO NEW DOMESTIC HOT WATER RETURN PIPE, REFER TO NEW WORK PLANS.
7. DISCONNECT AND REMOVE EXISTING GAS PIPING INCLUDING REGULATORS, VALVES AND ALL OTHER ASSOCIATED APPURTENANCES TO POINTS INDICATED ON PLAN. EXISTING REGULATORS TO BE RELOCATED, PREPARE EXISTING REGULATORS AND GAS PIPING FOR CONNECTION TO NEW GAS PIPING, REFER TO NEW WORK PLANS.
8. DISCONNECT EXISTING PNEUMATIC CONTROLS AND ASSOCIATED APPURTENANCES. COORDINATE WITH OWNERSHIP AND G.C. REGARDING TERMINATION POINT.

Bowman

457 OAKSHADE ROAD
SHAMONG, NJ 08088
(609)-268-0500
WWW.BOWMAN.COM

PROJECT
THE COLLEGE OF NEW JERSEY - EICKHOFF HALL
WATER HEATER REPLACEMENT PROJECT
2000 PENNINGTON ROAD
EWING, NJ 08628

TITLE
PLUMBING - LOWER LEVEL - DEMOLITION

CONTRACTOR SHALL CHECK & VERIFY ALL DIMENSIONS AND FIELD CONDITIONS PRIOR TO STARTING CONSTRUCTION.

REV:	DESC:	DATE:

DRAWN BY:	RNV
CHECKED BY:	WC
DATE:	03/28/2025
SCALE:	AS NOTED

JOB NO.	25033

P1.00

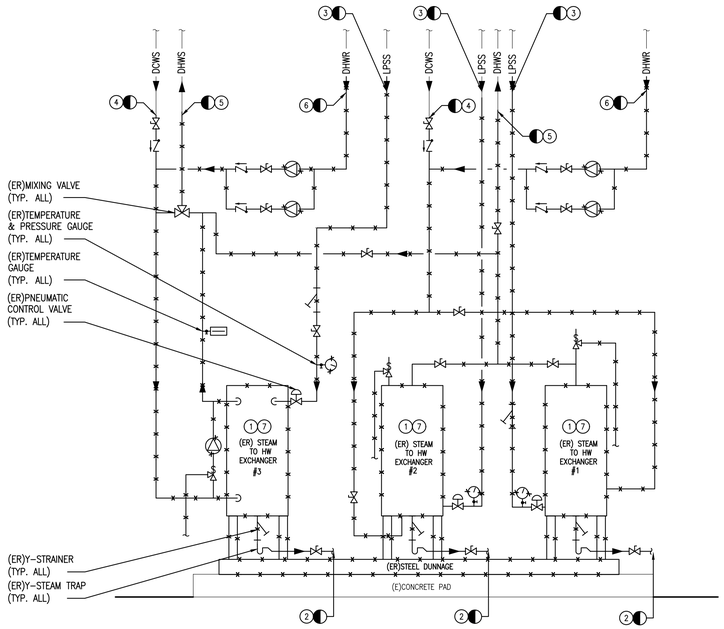

01 PLUMBING – PARTIAL FLOW DIAGRAM – DEMOLITION
SCALE: 1/4" = 1'-0"

NOTE: CONTRACTOR SHALL FIELD VERIFY ALL EXISTING PIPE SIZES, ROUTING, CONNECTIONS, ETC. AND NOTIFY ENGINEER OF ANY DISCREPANCIES.

KEY NOTES:

1. DISCONNECT AND REMOVE EXISTING STEAM EXCHANGER WATER HEATER TANK IN ITS ENTIRETY, INCLUDING ALL SUPPORTS, PIPING & APPURTENANCES.
2. DISCONNECT AND REMOVE EXISTING LOW PRESSURE STEAM CONDENSATE PIPING TO POINT SHOWN. PROVIDE NEW VALVE & CAP.
3. DISCONNECT AND REMOVE EXISTING LOW PRESSURE STEAM SUPPLY PIPING TO POINT SHOWN. PROVIDE WITH NEW VALVE & CAP.
4. DISCONNECT AND REMOVE EXISTING DOMESTIC COLD WATER SUPPLY PIPING INCLUDING BALL VALVES, CHECK VALVES AND ALL OTHER ASSOCIATED APPURTENANCES TO POINT INDICATED ON PLAN. PREPARE EXISTING DOMESTIC COLD WATER SUPPLY PIPE FOR CONNECTION TO NEW DOMESTIC COLD WATER SUPPLY PIPE, REFER TO NEW WORK PLANS.
5. DISCONNECT AND REMOVE EXISTING DOMESTIC HOT WATER SUPPLY PIPING INCLUDING THERMOSTATIC MIXING VALVE, BALL VALVES, CHECK VALVES AND ALL OTHER ASSOCIATED APPURTENANCES TO POINT INDICATED ON PLAN. PREPARE EXISTING DOMESTIC HOT WATER SUPPLY PIPE FOR CONNECTION TO NEW DOMESTIC HOT WATER SUPPLY PIPE, REFER TO NEW WORK PLANS.
6. DISCONNECT AND REMOVE EXISTING DOMESTIC HOT WATER RETURN PIPING INCLUDING CIRCULATION PUMPS, BALL VALVES, CHECK VALVES AND ALL OTHER ASSOCIATED APPURTENANCES TO POINT INDICATED ON PLAN. PREPARE EXISTING DOMESTIC HOT WATER RETURN PIPE FOR CONNECTION TO NEW DOMESTIC HOT WATER RETURN PIPE, REFER TO NEW WORK PLANS.
7. DISCONNECT EXISTING PNEUMATIC CONTROLS AND ASSOCIATED APPURTENANCES. COORDINATE WITH OWNERSHIP AND G.C. REGARDING TERMINATION POINT.

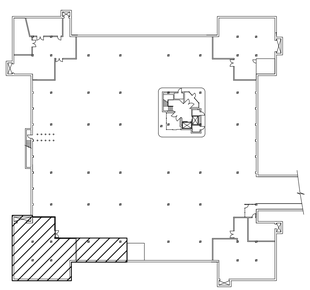

N LOWER LEVEL KEY PLAN
SCALE: N.T.S.

Bowman
457 OAKSHADE ROAD
SHAMONG, NJ 08088
(609)-268-0500
WWW.BOWMAN.COM

PROJECT
THE COLLEGE OF NEW JERSEY - EICKHOFF HALL
WATER HEATER REPLACEMENT PROJECT
2000 PENNINGTON ROAD
EWING, NJ 08628

TITLE
PLUMBING - PARTIAL FLOW DIAGRAM

CONTRACTOR SHALL CHECK & VERIFY ALL DIMENSIONS AND FIELD CONDITIONS PRIOR TO STARTING CONSTRUCTION.

REV:	DESC:	DATE:

DRAWN BY:	RNV
CHECKED BY:	WC
DATE:	03/28/2025
SCALE:	AS NOTED

JOB NO. 25033

P1.01

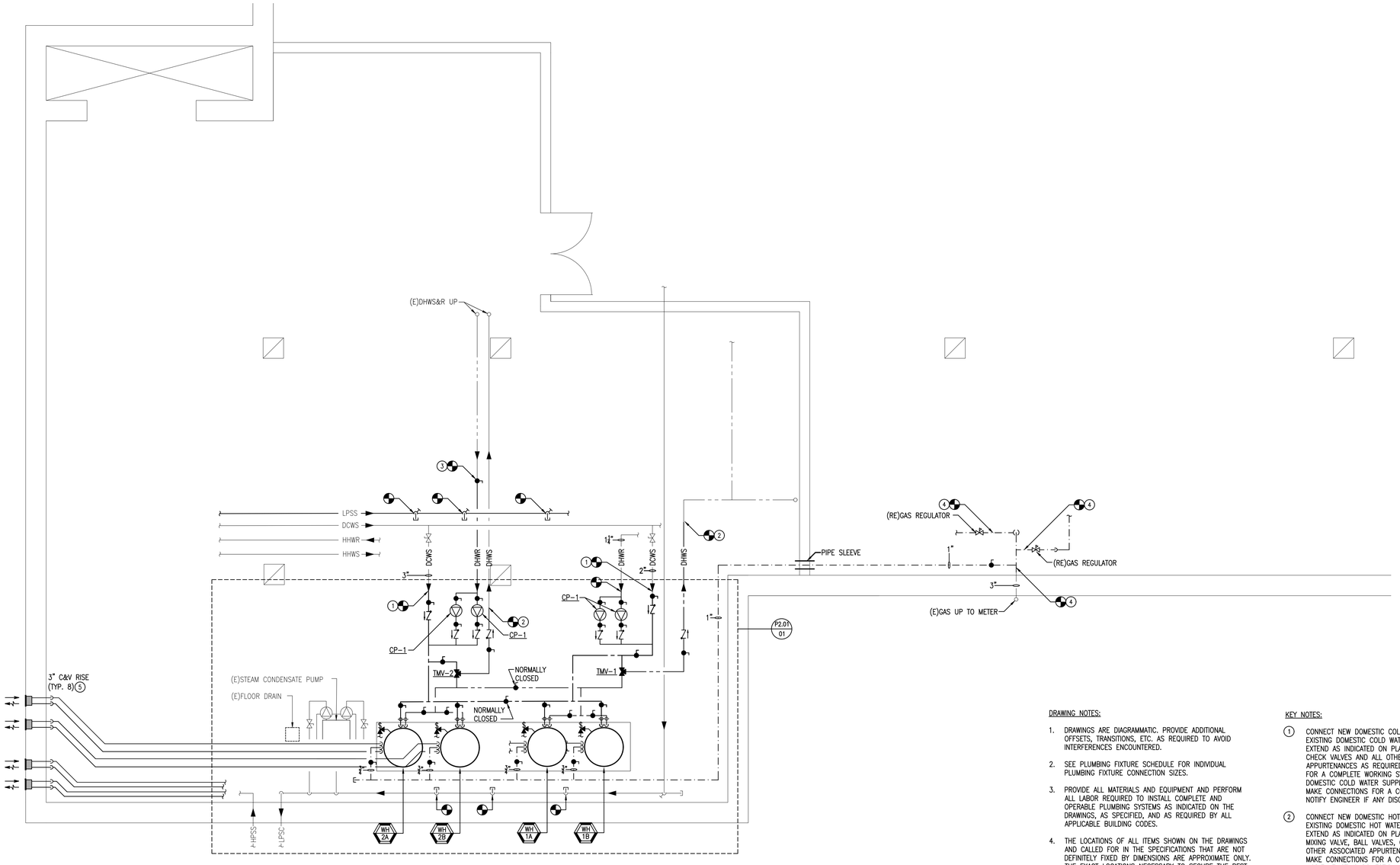

01 PLUMBING – LOWER LEVEL – DEMOLITION
SCALE: 1/4" = 1'-0"

NOTE: CONTRACTOR SHALL FIELD VERIFY ALL EXISTING PIPE SIZES, ROUTING, CONNECTIONS, ETC. AND NOTIFY ENGINEER OF ANY DISCREPANCIES.

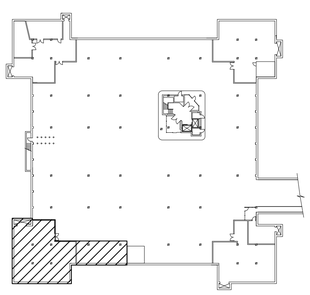

LOWER LEVEL KEY PLAN
SCALE: N.T.S.

DRAWING NOTES:

1. DRAWINGS ARE DIAGRAMMATIC. PROVIDE ADDITIONAL OFFSETS, TRANSITIONS, ETC. AS REQUIRED TO AVOID INTERFERENCES ENCOUNTERED.
2. SEE PLUMBING FIXTURE SCHEDULE FOR INDIVIDUAL PLUMBING FIXTURE CONNECTION SIZES.
3. PROVIDE ALL MATERIALS AND EQUIPMENT AND PERFORM ALL LABOR REQUIRED TO INSTALL COMPLETE AND OPERABLE PLUMBING SYSTEMS AS INDICATED ON THE DRAWINGS, AS SPECIFIED, AND AS REQUIRED BY ALL APPLICABLE BUILDING CODES.
4. THE LOCATIONS OF ALL ITEMS SHOWN ON THE DRAWINGS AND CALLED FOR IN THE SPECIFICATIONS THAT ARE NOT DEFINITELY FIXED BY DIMENSIONS ARE APPROXIMATE ONLY. THE EXACT LOCATIONS NECESSARY TO SECURE THE BEST CONDITIONS AND RESULTS MUST BE DETERMINED BY THE PROJECT SITE CONDITIONS. ALL LOCATIONS SHALL FOLLOW THE MANUFACTURER'S REQUIRED SERVICE CLEARANCES AND BE APPROVED BY THE ENGINEER.
5. ALL PENETRATIONS SHALL BE SEALED WITH AN APPROVED FIRESTOPPING MATERIAL.
6. CONTRACTOR SHALL PROVIDE MANUFACTURER'S RECOMMENDED CLEARANCES AND ACCESS TO ALL EQUIPMENT (NEW AND EXISTING). COORDINATE LOCATIONS WITH OTHER TRADES TO AVOID CONFLICTS.
7. PVC CELLULAR CORE (FOAM CORE) PIPE SYSTEMS IS NOT AN APPROVED ITEM AND SHALL NOT BE ACCEPTED FOR INSTALLATION UNDER ANY CIRCUMSTANCE.
8. PROVIDE 1" INSULATION MINIMUM FOR ALL DOMESTIC WATER PIPING SIZES UP TO 3/4". PROVIDE 1-1/2" MINIMUM INSULATION FOR ALL DOMESTIC WATER PIPING SIZES 1" AND GREATER.
9. NOT ALL VALVING AND OTHER ACCESSORIES MAY BE INDICATED ON PLANS AND SECTIONS. REFER TO DETAILS, FLOW DIAGRAMS AND SPECIFICATIONS FOR ADDITIONAL REQUIREMENTS.
10. CONTRACTOR SHALL COORDINATE THE LOCATIONS OF PLUMBING VENTS WITH THE OUTDOOR AIR INTAKES OF THE NEW AND EXISTING EQUIIPMENT. WHERE INTAKES ARE LESS THAN 10' AWAY, EXTEND THE VENT PIPING 2 FEET ABOVE THE INTAKE. FIELD VERIFY THE SIZE AND LOCATION OF EXISTING VENTS PRIOR TO CONSTRUCTION. (TYPICAL)

KEY NOTES:

1. CONNECT NEW DOMESTIC COLD WATER SUPPLY PIPING TO EXISTING DOMESTIC COLD WATER SUPPLY PIPING AND EXTEND AS INDICATED ON PLAN. PROVIDE BALL VALVES, CHECK VALVES AND ALL OTHER ASSOCIATED APPURTENANCES AS REQUIRED TO MAKE CONNECTIONS FOR A COMPLETE WORKING SYSTEM. MODIFY EXISTING DOMESTIC COLD WATER SUPPLY PIPING AS REQUIRED TO MAKE CONNECTIONS FOR A COMPLETE WORKING SYSTEM. NOTIFY ENGINEER IF ANY DISCREPANCIES.
2. CONNECT NEW DOMESTIC HOT WATER SUPPLY PIPING TO EXISTING DOMESTIC HOT WATER SUPPLY PIPING AND EXTEND AS INDICATED ON PLAN. PROVIDE THERMOSTATIC MIXING VALVE, BALL VALVES, CHECK VALVES AND ALL OTHER ASSOCIATED APPURTENANCES AS REQUIRED TO MAKE CONNECTIONS FOR A COMPLETE WORKING SYSTEM. MODIFY EXISTING DOMESTIC HOT WATER SUPPLY PIPING AS REQUIRED TO MAKE CONNECTIONS FOR A COMPLETE WORKING SYSTEM. NOTIFY ENGINEER IF ANY DISCREPANCIES.
3. CONNECT NEW DOMESTIC HOT WATER RETURN PIPING TO EXISTING DOMESTIC HOT WATER RETURN PIPING AND EXTEND AS INDICATED ON PLAN. PROVIDE CIRCULATION PUMPS, BALL VALVES, CHECK VALVES AND ALL OTHER ASSOCIATED APPURTENANCES AS REQUIRED TO MAKE CONNECTIONS FOR A COMPLETE WORKING SYSTEM. MODIFY EXISTING DOMESTIC HOT WATER RETURN PIPING AS REQUIRED TO MAKE CONNECTIONS FOR A COMPLETE WORKING SYSTEM. NOTIFY ENGINEER IF ANY DISCREPANCIES.
4. CONNECT NEW GAS PIPING TO EXISTING GAS PIPING AND EXTEND AS INDICATED ON PLAN. RELOCATE EXISTING GAS REGULATORS AS INDICATED ON PLAN. PROVIDE VALVES AND ALL OTHER ASSOCIATED APPURTENANCES AS REQUIRED TO MAKE CONNECTIONS FOR A COMPLETE WORKING SYSTEM. NEW GAS PIPING TO NEW WATER HEATERS WAS SIZED BASED ON 1PSI INCOMING SERVICE PRESSURE AT METER, NEW NATURAL GAS LOAD OF 1100 MBH, 100' TO FURTHEST PIECE OF EQUIPMENT USING 2021 IFGC TABLE 402.4(5). CONTRACTOR SHALL FIELD VERIFY 1PSI INCOMING SERVICE PRESSURE AT METER AND NOTIFY ENGINEER IF ANY DISCREPANCIES.
5. PROVIDE MANUFACTURER'S LOW PROFILE CONCENTRIC TERMINATION KIT INSTALLED ABOVE GRADE (MIN. 24")

Bowman
457 OAKSHADE ROAD
SHAMONG, NJ 08088
(609)-268-0500
WWW.BOWMAN.COM

PROJECT
THE COLLEGE OF NEW JERSEY - EICKHOFF HALL
WATER HEATER REPLACEMENT PROJECT
2000 PENNINGTON ROAD
EWING, NJ 08628

TITLE
PLUMBING - LOWER LEVEL - NEW WORK

CONTRACTOR SHALL CHECK & VERIFY ALL DIMENSIONS AND FIELD CONDITIONS PRIOR TO STARTING CONSTRUCTION.

REV:	DESC:	DATE:

DRAWN BY:	RNV
CHECKED BY:	WC
DATE:	03/28/2025
SCALE:	AS NOTED

JOB NO. 25033

P2.00

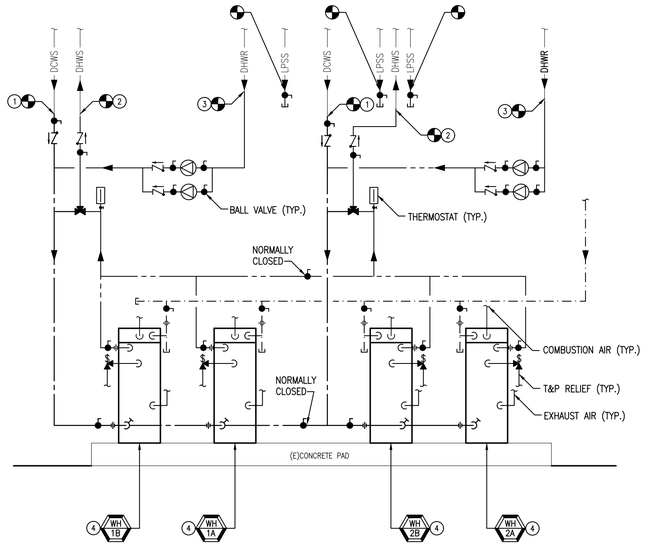

01 PLUMBING – PARTIAL FLOW DIAGRAM – NEW WORK
SCALE: 1/4" = 1'-0"

NOTE: CONTRACTOR SHALL FIELD VERIFY ALL EXISTING PIPE SIZES, ROUTING, CONNECTIONS, ETC. AND NOTIFY ENGINEER OF ANY DISCREPANCIES.

DRAWING NOTES:

1. DRAWINGS ARE DIAGRAMMATIC. PROVIDE ADDITIONAL OFFSETS, TRANSITIONS, ETC. AS REQUIRED TO AVOID INTERFERENCES ENCOUNTERED.
2. SEE PLUMBING FIXTURE SCHEDULE FOR INDIVIDUAL PLUMBING FIXTURE CONNECTION SIZES.
3. PROVIDE ALL MATERIALS AND EQUIPMENT AND PERFORM ALL LABOR REQUIRED TO INSTALL COMPLETE AND OPERABLE PLUMBING SYSTEMS AS INDICATED ON THE DRAWINGS, AS SPECIFIED, AND AS REQUIRED BY ALL APPLICABLE BUILDING CODES.
4. THE LOCATIONS OF ALL ITEMS SHOWN ON THE DRAWINGS AND CALLED FOR IN THE SPECIFICATIONS THAT ARE NOT DEFINITELY FIXED BY DIMENSIONS ARE APPROXIMATE ONLY. THE EXACT LOCATIONS NECESSARY TO SECURE THE BEST CONDITIONS AND RESULTS MUST BE DETERMINED BY THE PROJECT SITE CONDITIONS. ALL LOCATIONS SHALL FOLLOW THE MANUFACTURER'S REQUIRED SERVICE CLEARANCES AND BE APPROVED BY THE ENGINEER.
5. ALL PENETRATIONS SHALL BE SEALED WITH AN APPROVED FIRESTOPPING MATERIAL.
6. CONTRACTOR SHALL PROVIDE MANUFACTURER'S RECOMMENDED CLEARANCES AND ACCESS TO ALL EQUIPMENT (NEW AND EXISTING). COORDINATE LOCATIONS WITH OTHER TRADES TO AVOID CONFLICTS.
7. PVC CELLULAR CORE (FOAM CORE) PIPE SYSTEMS IS NOT AN APPROVED ITEM AND SHALL NOT BE ACCEPTED FOR INSTALLATION UNDER ANY CIRCUMSTANCE.
8. PROVIDE 1" INSULATION MINIMUM FOR ALL DOMESTIC WATER PIPING SIZES UP TO 3/4". PROVIDE 1-1/2" MINIMUM INSULATION FOR ALL DOMESTIC WATER PIPING SIZES 1" AND GREATER.
9. NOT ALL VALVING AND OTHER ACCESSORIES MAY BE INDICATED ON PLANS AND SECTIONS. REFER TO DETAILS, FLOW DIAGRAMS AND SPECIFICATIONS FOR ADDITIONAL REQUIREMENTS.
10. CONTRACTOR SHALL COORDINATE THE LOCATIONS OF PLUMBING VENTS WITH THE OUTDOOR AIR INTAKES OF THE NEW AND EXISTING EQUIIPMENT. WHERE INTAKES ARE LESS THAN 10' AWAY, EXTEND THE VENT PIPING 2 FEET ABOVE THE INTAKE. FIELD VERIFY THE SIZE AND LOCATION OF EXISTING VENTS PRIOR TO CONSTRUCTION. (TYPICAL)

KEY NOTES:

1. CONNECT NEW DOMESTIC COLD WATER SUPPLY PIPING TO EXISTING DOMESTIC COLD WATER SUPPLY PIPING AND EXTEND AS INDICATED ON PLAN. PROVIDE BALL VALVES, CHECK VALVES AND ALL OTHER ASSOCIATED APPURTENANCES AS REQUIRED TO MAKE CONNECTIONS FOR A COMPLETE WORKING SYSTEM. MODIFY EXISTING DOMESTIC COLD WATER SUPPLY PIPING AS REQUIRED TO MAKE CONNECTIONS FOR A COMPLETE WORKING SYSTEM. NOTIFY ENGINEER IF ANY DISCREPANCIES.
2. CONNECT NEW DOMESTIC HOT WATER SUPPLY PIPING TO EXISTING DOMESTIC HOT WATER SUPPLY PIPING AND EXTEND AS INDICATED ON PLAN. PROVIDE THERMOSTATIC MIXING VALVE, BALL VALVES, CHECK VALVES AND ALL OTHER ASSOCIATED APPURTENANCES AS REQUIRED TO MAKE CONNECTIONS FOR A COMPLETE WORKING SYSTEM. MODIFY EXISTING DOMESTIC HOT WATER SUPPLY PIPING AS REQUIRED TO MAKE CONNECTIONS FOR A COMPLETE WORKING SYSTEM. NOTIFY ENGINEER IF ANY DISCREPANCIES.
3. CONNECT NEW DOMESTIC HOT WATER RETURN PIPING TO EXISTING DOMESTIC HOT WATER RETURN PIPING AND EXTEND AS INDICATED ON PLAN. PROVIDE CIRCULATION PUMPS, BALL VALVES, CHECK VALVES AND ALL OTHER ASSOCIATED APPURTENANCES AS REQUIRED TO MAKE CONNECTIONS FOR A COMPLETE WORKING SYSTEM. MODIFY EXISTING DOMESTIC HOT WATER RETURN PIPING AS REQUIRED TO MAKE CONNECTIONS FOR A COMPLETE WORKING SYSTEM. NOTIFY ENGINEER IF ANY DISCREPANCIES.
4. PROVIDE CONDENSATE NEUTRALIZER KIT AND TERMINATE AT APPROVED OUTLET.

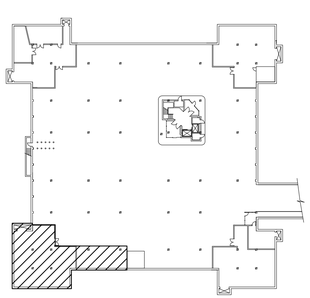

LOWER LEVEL KEY PLAN
SCALE: N.T.S.

Bowman
457 OAKSHADE ROAD
SHAMONG, NJ 08088
(609)-268-0500
WWW.BOWMAN.COM

PROJECT
THE COLLEGE OF NEW JERSEY - EICKHOFF HALL
WATER HEATER REPLACEMENT PROJECT
2000 PENNINGTON ROAD
EWING, NJ 08628

TITLE
PLUMBING - PARTIAL FLOW DIAGRAM - NEW WORK

CONTRACTOR SHALL CHECK & VERIFY ALL DIMENSIONS AND FIELD CONDITIONS PRIOR TO STARTING CONSTRUCTION.

REV:	DESC:	DATE:

DRAWN BY:	RNV
CHECKED BY:	WC
DATE:	03/28/2025
SCALE:	AS NOTED

JOB NO.	25033

P2.01

WATER HEATER SCHEDULE

TAG NO.	ITEM	MANUFACTURER	MODEL	STORAGE (GALLONS)	GAS (MBH)	ELECTRICAL				THERMAL EFFICIENCY	RECOVERY (GPH)	TEMP RISE (DEG. F)	REMARKS
						V	PH	HZ	KW				
WH 1A	WATER HEATER	BRADFORD WHITE	EF-100T-250E-3N(A)	100	250	120	1	60	–	96%	323	90°	PROVIDE LOW PROFILE TERMINATION KIT, CONDENSATE NEUTRALIZER KIT AND EXPANSION TANK.
WH 1B	WATER HEATER	BRADFORD WHITE	EF-100T-250E-3N(A)	100	250	120	1	60	–	96%	323	90°	PROVIDE LOW PROFILE TERMINATION KIT, CONDENSATE NEUTRALIZER KIT AND EXPANSION TANK.
WH 2A	WATER HEATER	BRADFORD WHITE	EF-100T-300E-3N(A)	100	300	120	1	60	–	92%	478	70°	PROVIDE LOW PROFILE TERMINATION KIT, CONDENSATE NEUTRALIZER KIT AND EXPANSION TANK.
WH 2B	WATER HEATER	BRADFORD WHITE	EF-100T-300E-3N(A)	100	300	120	1	60	–	92%	478	70°	PROVIDE LOW PROFILE TERMINATION KIT, CONDENSATE NEUTRALIZER KIT AND EXPANSION TANK.

NOTES:

1. WATER HEATER 1 (WH-1) TEMPERATURE SHALL BE SET TO 160°F., PROVIDE TMV-1 MASTER THERMOSTATIC MIXING VALVE SET TO 140°F. (SEE DETAIL)
1. WATER HEATER 2 (WH-2) TEMPERATURE SHALL BE SET TO 140°F., PROVIDE TMV-1 MASTER THERMOSTATIC MIXING VALVE SET TO 120°F. (SEE DETAIL)

PUMP SCHEDULE

SYMBOL	SERVICE	MANUFACTURER	MODEL	GPM/PSI	HEAD FT	MOTOR DATA					REMARKS
						V	PH	HZ	HP	RPM	
CP 1	DHW RECIRCULATION	TACO	00 SERIES VARIABLE SPEED	NOTE 1	NOTE 1	120	1	60	NOTE 1	3250	PROVIDE TACO 00 7 DAY DIGITAL TIMER, 115/60/1. PROVIDE ALL WIRING, STARTERS, RELAYS AND TRANSFORMERS AS REQUIRED TO OPERATE PUMP AND TIMER FOR A COMPLETE WORKING SYSTEM.

NOTES:

1. CONTRACTOR SHALL REPLACE EXISTING CIRCULATION PUMPS BEING REMOVED IN-KIND WITH NEW CIRCULATION PUMPS, NEW CIRCULATION PUMP PERFORMANCE CHARACTERISTICS SHALL MATCH EXISTING PUMP BEING REMOVED.

PIPE SCHEDULE

TAG	TYPE	MATERIAL/FITTINGS	SIZES	INSULATION	NOTES
CW	DOMESTIC COLD WATER	TYPE L COPPER HARD DRAWN / WROUGHT COPPER FITTINGS	1-1/4" OR SMALLER	1" FIBERGLASS	
CW	DOMESTIC COLD WATER	TYPE L COPPER HARD DRAWN / WROUGHT COPPER FITTINGS	1-1/2" OR LARGER	1" FIBERGLASS	
HW	DOMESTIC HOT WATER	TYPE L COPPER HARD DRAWN / WROUGHT COPPER FITTINGS	1-1/4" OR SMALLER	1" FIBERGLASS	
HW	DOMESTIC HOT WATER	TYPE L COPPER HARD DRAWN / WROUGHT COPPER FITTINGS	1-1/2" OR LARGER	1.5" FIBERGLASS	
HWR	DOMESTIC HOT WATER RETURN	TYPE L COPPER HARD DRAWN / WROUGHT COPPER FITTINGS	1-1/4" OR SMALLER	1" FIBERGLASS	
HWR	DOMESTIC HOT WATER RETURN	TYPE L COPPER HARD DRAWN / WROUGHT COPPER FITTINGS	1-1/2" OR LARGER	1.5" FIBERGLASS	
GAS	NATURAL GAS	BLACK STEEL SCHEDULE 40 / MALLEABLE-IRON THREADED FITTINGS	ALL	–	

NOTES:

1. REFER TO SPECIFICATIONS FOR ADDITIONAL INFORMATION AND REQUIREMENTS.
2. FOAM CORE PVC IS NOT AN APPROVED MATERIAL TO BCG STANDARDS

MISCELLANEOUS PLUMBING SCHEDULE

TAG	TYPE	MANUFACTURER	MODEL #	SIZE	REMARKS
TMV-1	THERMOSTATIC MIXING VALVE	HOLBY	2"	2" HW,TW 1-1/2" CW	SEE NOTE 1
TMV-2	THERMOSTATIC MIXING VALVE	HOLBY	2-1/2"	2-1/2" HW,TW 2" CW	SEE NOTE 1

NOTES:

1. CONTRACTOR SHALL REPLACE EXISTING THERMOSTATIC MIXING VALVES BEING REMOVED IN-KIND WITH NEW THERMOSTATIC MIXING VALVES. CONTRACTOR SHALL FIELD VERIFY EXISTING TEMPERED WATER PIPE SIZES BEING RECONNECTED AND NOTIFY ENGINEER IF ANY DISCREPANCIES. INSTALL PER MANUFACTURERS RECOMMENDATIONS.

Bowman

457 OAKSHADE ROAD
SHAMONG, NJ 08088
(609)-268-0500
WWW.BOWMAN.COM

PROJECT
THE COLLEGE OF NEW JERSEY - EICKHOFF HALL
WATER HEATER REPLACEMENT PROJECT
2000 PENNINGTON ROAD
EWING, NJ 08628

TITLE
PLUMBING - SCHEDULES

CONTRACTOR SHALL CHECK & VERIFY ALL DIMENSIONS AND FIELD CONDITIONS PRIOR TO STARTING CONSTRUCTION.

REV:	DESC:	DATE:

DRAWN BY:	RNV
CHECKED BY:	WC
DATE:	03/28/2025
SCALE:	AS NOTED

JOB NO.	25033

P3.00

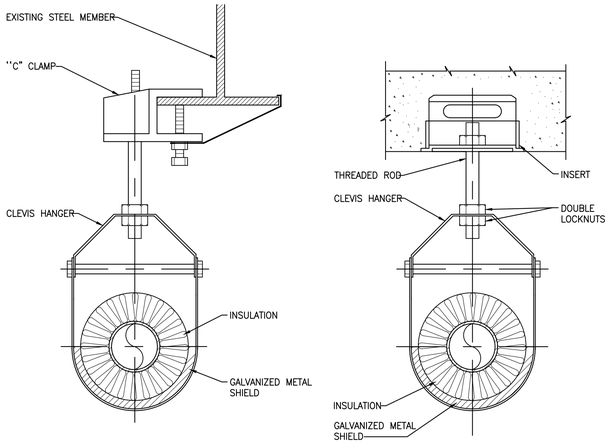

NOTE:

HANGER, ROD & INSERT SHALL BE DIPPED IN ZINC CHROMATE PRIMER PRIOR TO INSTALLATION

WITH INCOMPRESSIBLE INSULATING BLOCK AT HANGER		
PIPE DIAMETER	SHIELD LENGTH	SHIELD THICKNESS USSG
UP TO 3"	6"	18
4" TO 6"	8"	16
8" & LARGER	12"	16

WITHOUT INCOMPRESSIBLE INSULATING BLOCK AT HANGER		
PIPE DIAMETER	SHIELD LENGTH	SHIELD THICKNESS USSG
UP TO 3"	12"	18
4"	15"	16
5"	18"	16
6"	21"	16
8" & LARGER	24"	14

01 TYPICAL INSULATED PIPING SUPPORT DETAIL

SCALE: N.T.S

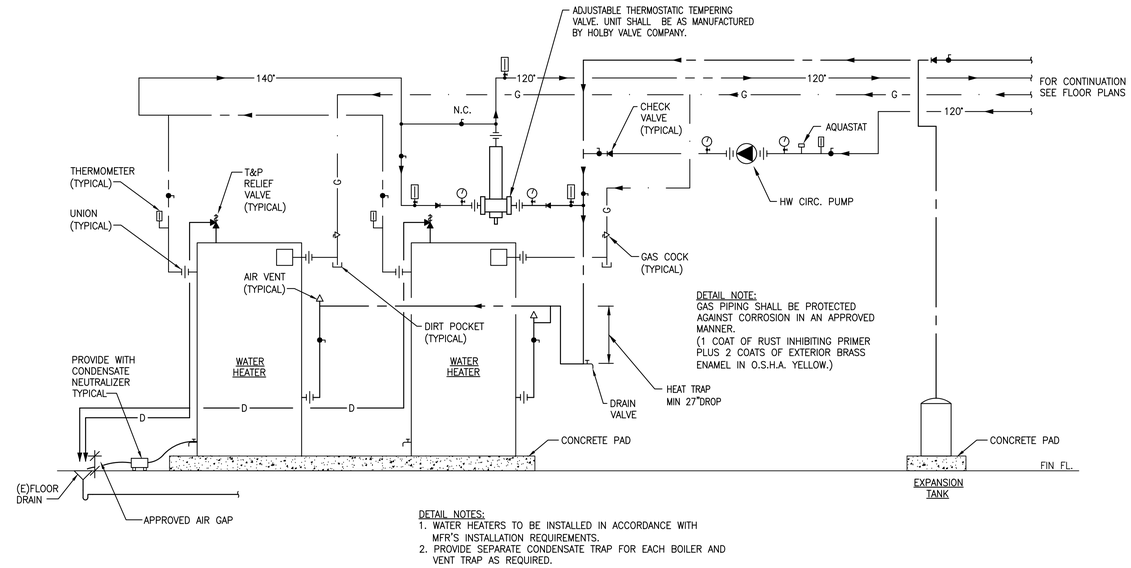

DETAIL NOTE:
GAS PIPING SHALL BE PROTECTED AGAINST CORROSION IN AN APPROVED MANNER.
(1 COAT OF RUST INHIBITING PRIMER PLUS 2 COATS OF EXTERIOR BRASS ENAMEL IN O.S.H.A. YELLOW.)

DETAIL NOTES:
1. WATER HEATERS TO BE INSTALLED IN ACCORDANCE WITH MFR'S INSTALLATION REQUIREMENTS.
2. PROVIDE SEPARATE CONDENSATE TRAP FOR EACH BOILER AND VENT TRAP AS REQUIRED.

02 TYPICAL DUAL GAS-FIRED WATER HEATER WITH RECIRCULATION DETAIL

SCALE: N.T.S

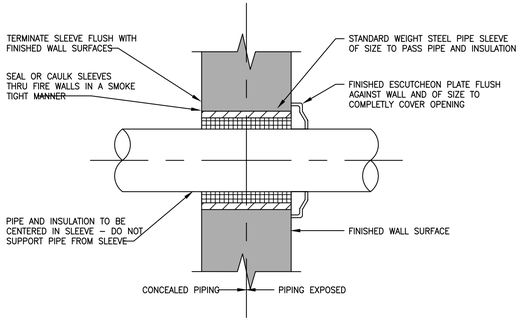

03 PIPE SLEEVE THRU WALL DETAIL

SCALE: N.T.S

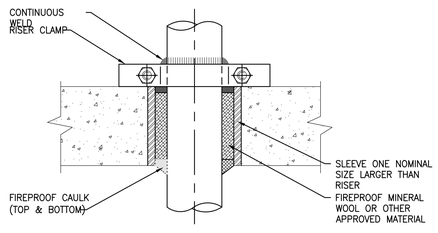

04 PIPE RISER SUPPORT DETAIL

SCALE: N.T.S

Bowman

457 OAKSHADE ROAD
SHAMONG, NJ 08088
(609)-268-0500
WWW.BOWMAN.COM

PROJECT
THE COLLEGE OF NEW JERSEY - EICKHOFF HALL
WATER HEATER REPLACEMENT PROJECT
2000 PENNINGTON ROAD
EWING, NJ 08628

TITLE
PLUMBING - DETAILS

CONTRACTOR SHALL CHECK & VERIFY ALL DIMENSIONS AND FIELD CONDITIONS PRIOR TO STARTING CONSTRUCTION.

REV:	DESC:	DATE:

DRAWN BY:	RNV
CHECKED BY:	WC
DATE:	03/28/2025
SCALE:	AS NOTED

JOB NO.	25033

P4.00

ELECTRICAL SYMBOLS LIST

(NOT ALL SYMBOLS ARE NECESSARILY USED ON THIS PROJECT)

LIGHTING SYMBOLS

2'x4'/2'x2'/1'x4' RECESSED CEILING MOUNTED LIGHT FIXTURE
A = FIXTURE TYPE
a = CONTROLLED BY SWITCH a
NL = NIGHT LIGHT

SIMILAR TO ABOVE WITH EMERGENCY BACKUP
A = FIXTURE TYPE
a = CONTROLLED BY SWITCH a

WALL MOUNTED LIGHT FIXTURE
A = FIXTURE TYPE
a = CONTROLLED BY SWITCH a
NL = NIGHT LIGHT

STRIP LIGHT FIXTURE – TYPE AS NOTED
A = FIXTURE TYPE
a = CONTROLLED BY SWITCH a

SIMILAR TO ABOVE WITH EMERGENCY BACKUP
A = FIXTURE TYPE
a = CONTROLLED BY SWITCH a

UNDERCABINET LIGHT FIXTURE
A = FIXTURE TYPE

CEILING MOUNTED/RECESSED FIXTURE
A = FIXTURE TYPE
a = CONTROLLED BY SWITCH a

SIMILAR TO ABOVE WITH EMERGENCY BACKUP
A = FIXTURE TYPE
a = CONTROLLED BY SWITCH a

WALL MOUNTED LIGHT FIXTURE
A = FIXTURE TYPE
a = CONTROLLED BY SWITCH a

SIMILAR TO ABOVE WITH EMERGENCY BACKUP
A = FIXTURE TYPE
a = CONTROLLED BY SWITCH a

ACCENT LIGHT OR WALL WASHER
A = FIXTURE TYPE
a = CONTROLLED BY SWITCH a

SIMILAR TO ABOVE WITH EMERGENCY BACKUP
A = FIXTURE TYPE
a = CONTROLLED BY SWITCH a

LIGHT TRACK–TYPE 'A' WITH TRACK MOUNTED FIXTURE TYPE 'B'

CEILING MOUNTED EXIT LIGHT – DIRECTIONAL ARROWS WHERE INDICATED – SHADED AREAS INDICATE ILLUMINATED FACE/FACES
W = WALL MOUNTED
E = END MOUNTED
C = CEILING MOUNTED

EMERGENCY BATTERY LIGHT UNIT
A = FIXTURE TYPE

REMOTE LIGHT HEADS FOR EMERGENCY BATTERY LIGHT UNIT – TYPE AS NOTED

POWER SYMBOLS

SINGLE POLE SWITCH
2 = DOUBLE POLE
3 = THREE–WAY
4 = FOUR–WAY
a = CONTROLS SWITCH LEG 'a'
D = DIMMER
DR = DOOR
K = KEY OPERATED
MO = MOMENTARY CONTACT
T = TIMER SWITCH
P = PILOT LIGHT
LV = LOW VOLTAGE

DISCONNECT SWITCH – TOGGLE TYPE WITH THERMAL OVERLOAD – HP RATED

DISCONNECT SWITCH – TOGGLE TYPE MOTOR RATED, AMPS AND # OF POLES AS REQUIRED.

VACANCY SENSOR, WALL MOUNTED

VACANCY SENSOR, CEILING MOUNTED

OCCUPANCY SENSOR, CEILING MOUNTED

OCCUPANCY SENSOR, WALL MOUNTED

PHOTOCELL SENSOR, WALL MOUNTED

20A, 125V DUPLEX RECEPTACLE – FLUSH WALL MOUNTED CONTROLLED FROM WALL SWITCH "a"

20A, 125V DUPLEX RECEPTACLE – FLUSH WALL MOUNTED, TAMPER RESISTANT

20A, 125V DUPLEX RECEPTACLE WITH DUAL USB CHARGING OUTLETS FLUSH WALL MOUNTED

20A, 125V DUPLEX RECEPTACLE – FLUSH WALL MOUNTED, CONTROLLED

20A, 125V QUADRUPLEX RECEPTACLE – FLUSH WALL MOUNTED

20A, 125V ISOLATED GROUND, DUPLEX RECEPTACLE, FLUSH WALL MOUNTED

20A, 125V DUPLEX RECEPTACLE, FLUSH WALL MOUNTED, GFI TYPE

20A, 125V EMERGENCY DUPLEX RECEPTACLE, FLUSH WALL MOUNTED

UTILITY METER, UON

SINGLE RECEPTACLE, FLUSH WALL MOUNTED

20A, 125V DUPLEX RECEPTACLE, FLUSH FLOOR MOUNTED

20A, 125V QUADRUPLEX RECEPTACLE, FLUSH FLOOR MOUNTED

PEDESTAL MOUNTED 20A, 125V DUPLEX RECEPTACLE

PEDESTAL MOUNTED 20A, 125V QUADRUPLEX RECEPTACLE

PENDANT MOUNTED 20A, 125V DUPLEX RECEPTACLE

PENDANT MOUNTED 20A, 125V QUADRUPLEX RECEPTACLE

SPECIAL PURPOSE RECEPTACLE, FLUSH FLOOR MOUNTED, A = TYPE

SPECIAL PURPOSE RECEPTACLE, FLUSH WALL MOUNTED, A = TYPE

WALL MOUNTED CLOCK
D = DOUBLE FACE

MOTOR CONTROLLER

COMBINATION MOTOR CONTROLLER AND DISCONNECT SWITCH AMPS/# OF POLES, VOLTAGE RATING AS REQUIRED

UNFUSED DISCONNECT SWITCH
SWITCH AMPS/# OF POLES, VOLTAGE RATING AS REQUIRED

FUSED DISCONNECT SWITCH
SWITCH AMPS/FUSE AMPS/# OF POLES, VOLTAGE RATING AS REQUIRED

ENCLOSED CIRCUIT BREAKER
TRIP AMPS/# OF POLES, VOLTAGE RATING AS REQUIRED

POWER POLE

SURFACE MOUNTED PANELBOARD

FLUSH MOUNTED PANELBOARD

CEILING MOUNTED JUNCTION BOX

FLUSH WALL MOUNTED JUNCTION BOX

FLUSH FLOOR MOUNTED JUNCTION BOX

CAP

PUSH BUTTON
K = KEY OPERATED
H = HOLD UP
P = PANIC
EPO = EM. POWER OFF

EXISTING CONDUIT/EQUIPMENT TO BE REMOVED

UNDERGROUND CONDUIT/WIRING

POINT OF CONNECTION

POINT OF DISCONNECTION

FIRE ALARM SYMBOLS

CEILING MOUNTED SPACE SMOKE DETECTOR
F = MOUNTED UNDER RAISED FLOOR

DUCT SMOKE DETECTOR

CEILING MOUNTED CARBON MONOXIDE DETECTOR

SINGLE/MULTI STATION SMOKE ALARM

SINGLE/MULTI STATION CARBON MONOXIDE ALARM

SINGLE/MULTI STATION SMOKE/CARBON MONOXIDE ALARM

THERMAL DETECTOR RATE–OF–RISE
F = FIXED TEMPERATURE

SPRINKLER WATERFLOW SWITCH

SPRINKLER PRESSURE SWITCH

SPRINKLER TAMPER SWITCH

FIRE ALARM PULL STATION

FIRE ALARM TELEPHONE JACK

COMBINATION FIRE ALARM SPEAKER AND STROBE LIGHT UNIT – FLUSH WALL MOUNTED

FIRE ALARM SPEAKER – FLUSH WALL MOUNTED
C = CEILING MOUNTED

COMBINATION FIRE ALARM HORN AND STROBE LIGHT UNIT, FLUSH WALL MOUNTED

FIRE ALARM HORN – FLUSH WALL MOUNTED
C = CEILING MOUNTED

LOW FREQUENCY SOUNDER (520 HZ) – FLUSH WALL MOUNTED
C = CEILING MOUNTED

COMBINATION FIRE ALARM BELL AND STROBE LIGHT UNIT, FLUSH WALL MOUNTED

FIRE ALARM BELL, FLUSH WALL MOUNTED

FIRE ALARM MONITOR MODULE

FIRE ALARM CONTROL MODULE

DOOR HOLDERS

ELECTROMAGNETIC DOOR RELEASE

ELEVATOR RECALL TIE–IN POINT

FLUSH WALL MOUNTED STROBE LIGHT UNIT

CEILING MOUNTED STROBE LIGHT UNIT

REMOTE INDICATOR LIGHT

VOICE/DATA/P.A. SYMBOLS

WALL MOUNTED PUBLIC ADDRESS SPEAKER
D = DUAL HORN

CEILING MOUNTED PUBLIC ADDRESS SPEAKER
D = DUAL HORN

VOICE & DATA OUTLET LOCATION WITH 1" CONDUIT TERMINATED IN A 90 DEG. BEND 6" INTO NEAREST ACCESSIBLE CEILING
#/# = # OF VOICE JACKS/# OF DATA JACKS

VOICE OUTLET LOCATION WITH 1" CONDUIT TERMINATED IN A 90 DEG. BEND 6" INTO NEAREST ACCESSIBLE CEILING
P = PUBLIC
F = FAX
W = WALL MOUNTED
# = # OF JACKS

DATA OUTLET LOCATION WITH 1" CONDUIT TERMINATED IN A 90 DEG. BEND 6" INTO NEAREST ACCESSIBLE CEILING
= # OF JACKS

TELEVISION OUTLET LOCATION WITH 3/4" CONDUIT TERMINATED IN A 90 DEG. BEND 6" INTO NEAREST ACCESSIBLE CEILING

CLOSED CIRCUIT TV CAMERA OUTLET LOCATION WITH 3/4" CONDUIT TERMINATED IN A 90 DEG. BEND 6" INTO NEAREST ACCESSIBLE CLG

CARD ACCESS STATION OUTLET LOCATION WITH 3/4" CONDUIT TERMINATED IN A 90 DEG. BEND 6" INTO NEAREST ACCESSIBLE CLG

WIRELESS ACCESS POINT LOCATION

ABBREVIATIONS

(NOT ALL ABBREVIATIONS ARE NECESSARILY USED ON THIS PROJECT)

1P	SINGLE POLE
2P	TWO POLE
3P	THREE POLE
A	AMPERE
AC	ABOVE COUNTER
ACB	AIR CIRCUIT BREAKER
AFF	ABOVE FINISHED FLOOR
AFG	ABOVE FINISHED GRADE
AHJ	AUTHORITY HAVING JURISDICTION
AIC	AMPERE INTERRUPTING CAPACITY
AL	ALUMINUM
ALM	ALARM
AMM	AMMETER
ARF	ABOVE RAISED FLOOR
ATS	AUTOMATIC TRANSFER SWITCH
AUTO	AUTOMATIC
AV	AUDIO VISUAL
AWG	AMERICAN WIRE GAUGE
BFC	BELOW FINISHED CEILING
BG	BREAK GLASS SWITCH
BIL	BASIC IMPULSE LEVEL
BLDG	BUILDING
CAB	CABINET
CAT	CATALOG
C	CONDUIT
CB	CIRCUIT BREAKER
CCTV	CLOSED CIRCUIT TELEVISION
CKT	CIRCUIT
CL	CENTER LINE
CLG	CEILING
CTL	CONTROL
CO	CONDUIT ONLY
COM	COMMUNICATION
CONN	CONNECTED
CONT	CONTINUATION
CT	CURRENT TRANSFORMER
CU	COPPER
CUH	CABINET UNIT HEATER
DB	DECIBEL
DE	DUAL ELEMENT FUSE(S)
DEG	DEGREE
°C	DEGREE CELSIUS
°F	DEGREE FAHRENHEIT
DIA	DIAMETER
DISC	DISCONNECT
DIV	DIVISION
DN	DOWN
DP	DISTRIBUTION PANEL BOARD
DS	DISCONNECT SWITCH
DWG	DRAWING
(E)	EXISTING TO REMAIN
EA	EACH
EC	ELECTRICAL CONTRACTOR
EL	ELEVATION
ELEC	ELECTRICAL
ELEV	ELEVATOR
EM	EMERGENCY
EMT	ELECTRICAL METALLIC TUBING
ENCL	ENCLOSURE
EQ	EQUIPMENT
(ER)	EXISTING SHALL BE REMOVED
(ERR)	EXISTING SHALL BE REMOVED & RELOCATED
ERC	ELECTRIC REHEAT COIL
EWC	ELECTRIC WATER COOLER
EXIST,EX	EXISTING
EXT	EXTERIOR
FA	FIRE ALARM
FAA	FIRE ALARM ANNUNCIATOR PANEL
FACP	FIRE ALARM CONTROL PANEL
FBO	FURNISHED BY OTHERS
FCU	FAN COIL UNIT
FDR	FEEDER
FDS	FUSED DISCONNECT SWITCH
FIXT	FIXTURE
FL	FLOOR
FLA	FULL LOAD AMPERES
FLEX	FLEXIBLE
FLUOR	FLUORESCENT
FP	FIRE PROTECTION
FRZ	FREEZER
FT	FEET OR FOOT
G	GROUND
GC	GENERAL CONTRACTOR
GEN	GENERATOR
GFI	GROUND FAULT INTERRUPTER
HID	HIGH INTENSITY DISCHARGE
HP	HORSE POWER
HPCS	HIGH PRESSURE CONTACT SWITCH
HT	HEIGHT
HV	HIGH VOLTAGE
HZ	HERTZ
ID	INSIDE DIAMETER
IG	ISOLATED GROUND
INC	INCANDESCENT
INCL	INCLUDED
INST	INSTRUMENT
IPC	ISOLATED POWER CENTER
IPX	ISOLATED POWER CENTER–X–RAY
JB	JUNCTION BOX
KCMIL	THOUSAND CIRCULAR MILS
KV	KILOVOLT
KVA	KILOVOLT AMPERE
KW	KILOWATT
KWH	KILOWATT HOUR
LFMC	LIQUIDTIGHT FLEXIBLE METALLIC CONDUIT
LFNC	LIQUIDTIGHT FLEXIBLE NON–METALLIC CONDUIT
LIM	LINE ISOLATION MONITOR
LTG	LIGHTING
MAP	MEDICAL GAS ALARM PANEL
MAX	MAXIMUM
MC	METAL CLAD, MECH. CONTRACTOR
MCA	MIN. CIRCUIT AMPERES
MCB	MAIN CIRCUIT BREAKER
MCC	MOTOR CONTROL CENTER
MDP	MAIN DISTRIBUTION PANEL
MECH	MECHANICAL
MER	MECHANICAL ROOM
MFR	MANUFACTURER
MFS	MAIN FUSED SWITCH
MH	MANHOLE, METAL HALIDE
MIC	MICROPHONE
MIN	MINIMUM
MLO	MAIN LUG ONLY
MOCP	MAX. OVERCURRENT PROTECTION
MOPD	MAX. OVERCURRENT PROTECTION
MTD	MOUNTED
MTG	MOUNTING
MTS	MANUAL TRANSFER SWITCH
N	NEUTRAL
(N)	NEW
NC	NORMALLY CLOSED
NIC	NOT IN CONTRACT
NO	NORMALLY OPEN
NTS	NOT TO SCALE
OC	ON CENTER
OCB	OIL CIRCUIT BREAKER
OD	OUTSIDE DIAMETER
OH	OVERHEAD
P	POLE
PA	PUBLIC ADDRESS
PB	PULL BOX
PBS	PUSH BUTTON SWITCH
PC	PLUMBING CONTRACTOR
PHC	PIPE HEATING CABLE
ϕ, PH	PHASE
PNL	PANEL
PRI	PRIMARY
PT	POTENTIAL TRANSFORMER
PWR	POWER
RCS	REMOTE CONTROL SWITCH
(RE)	RELOCATED EXISTING
REC	RECEPTACLE
REF	REFRIGERATOR
REQ	REQUIRED
RM	ROOM
RGS	RIGID GALVANIZED STEEL CONDUIT
(RRO)	EXISTING SHALL BE REMOVED AND RETURN TO OWNER
SAP	SPRINKLER ALARM PANEL
SCH	SCHEDULE
SE	SERVICE ENTRANCE
SEC	SECONDARY
SECT	SECTION
SN	SOLID NEUTRAL
SPEC	SPECIFICATION
SP	SPEAKER
SPKR	SPRINKLER
SPD	SURGE PROTECTION DEVICE
SW	SWITCH
SWBD	SWITCHBOARD
SYS	SYSTEMS
SUBST	SUBSTATION
SWGR	SWITCHGEAR
TBD	TO BE DETERMINED
TEL	TELEPHONE
TEMP	TEMPERATURE
THERM	THERMOSTAT
TP	TAMPER PROOF
TS	TAMPER SWITCH
TV	TELEVISION
TYP	TYPICAL
UH	UNIT HEATER
UG	UNDERGROUND
UON	UNLESS OTHERWISE NOTED
V	VOLT OR VOLTAGE
VA	VOLT AMPERE
VFD	VARIABLE FREQUENCY DRIVE
VM	VOLTMETER
VP	VAPORPROOF
W	WATT
WP	WEATHERPROOF
WT	WATERTIGHT
XFMR	TRANSFORMER
XP	EXPLOSION PROOF

GENERAL ELECTRICAL NOTES:

1. DRAWINGS ARE DIAGRAMMATIC AND INDICATE GENERAL ARRANGEMENT OF SYSTEMS AND WORK. FOLLOW DRAWINGS IN LAYING OUT WORK AND CHECK DRAWINGS AND FIELD DIMENSIONS OF OTHER TRADES TO VERIFY SPACE CONDITIONS. MAINTAIN HEADROOM AND SPACE REQUIREMENTS.
2. PERFORM ALL WORK IN STRICT ACCORDANCE WITH NATIONAL ELECTRICAL CODE (N.E.C.–2020) AS ADOPTED BY THE STATE OF NEW JERSEY, OSHA REQUIREMENTS, ALL FEDERAL, STATE, AND LOCAL CODES AND ALL OWNER REQUIREMENTS.
3. WHERE THERE IS A DISCREPANCY BETWEEN MATERIAL OR EQUIPMENT IN THE DRAWINGS AND/OR SPECIFICATIONS, THE CONTRACTOR SHALL ASSUME THE MORE STRINGENT, HIGHER QUALITY AND MORE EXPENSIVE OPTION FOR BIDDING.
4. INCLUDE ALL TEMPORARY POWER AND LIGHTING, PERMIT, LICENSE, AND INSPECTION COSTS IN BID.
5. CONTRACTOR SHALL ISSUE IN WRITING TO ARCHITECT/ENGINEER ANY SCOPE OF WORK DISCREPANCIES AND/OR QUESTIONS PRIOR TO SUBMISSION OF BID.
6. CONTRACTOR SHALL EXAMINE ALL DRAWINGS AND SPECIFICATIONS AND VISIT THE SITE TO BECOME ACQUAINTED WITH THE CONSTRUCTION, SITE AND THE EXTENT OF THE WORK PRIOR TO SUBMISSION OF BID.
7. COORDINATE ALL REQUIRED SHUTDOWNS WITH THE OWNER (AND UTILITY COMPANY WHERE APPLICABLE) A MINIMUM OF FOURTEEN (14) DAYS IN ADVANCE. INCLUDE OVERTIME COSTS IN BID TO PERFORM ALL SHUTDOWNS (INCLUDING SHUTDOWNS FOR AREAS WHICH MAY BE UNOCCUPIED DURING CONSTRUCTION) AFTER NORMAL WORKING HOURS AS COORDINATED WITH THE OWNER. NO EXTRA CLAIMS OR COMPENSATION SHALL BE GRANTED FOR OVERTIME COSTS ASSOCIATED WITH PERFORMING SHUTDOWNS.
8. SECURE ALL SUPPORTS TO BUILDING STRUCTURE BY STEEL FOR VERTICAL SUPPORT AND BY MEANS OF TOGGLE BOLTS ON HOLLOW MASONRY UNITS, EXPANSION SHIELDS IN CONCRETE OR BRICK. MACHINE SCREWS ON METAL SURFACE, AND WOOD SCREWS ON WOOD CONSTRUCTION. NAILS, RAWL OR WOOD PLUGS NOT PERMITTED. SUPPORT HORIZONTAL RUNS OR METALLIC CONDUITS NOT MORE THAN 10 FT. APART. SUPPORT RACEWAY RISERS AT EACH FLOOR LEVEL. RUN EXPOSED RACEWAYS PARALLEL WITH OR AT RIGHT ANGLES TO WALLS.
9. PASS RACEWAYS OVER WATER, STEAM, OR OTHER PIPING WHEN PULL BOXES ARE NOT REQUIRED. NO RACEWAY WITHIN 3 IN. OF STEAM OR HOT WATERS PIPES, OR APPLIANCES, EXCEPT CROSSINGS WHERE RACEWAY SHALL BE AT LEAST 1 IN. FROM PIPE COVER.
10. FURNISH FISH WIRE IN EACH RACEWAY RUN OVER 10 FT IN WHICH WIRING IS NOT INSTALLED.
11. CUT STEEL CONDUIT ENDS SQUARE, REAM SMOOTH, PAINT MALE THREADS OF FIELD THREADED CONDUIT WITH GRAPHITE BASE PIPE COMPOUND. DRAW UP TIGHT WITH CONDUIT COUPLINGS.
12. HORIZONTAL OR CROSS RUNS IN PARTITIONS AND WALLS NOT PERMITTED.
13. ROUTE ALL CONDUITS AND CABLES PARALLEL OR PERPENDICULAR TO BUILDING LINES WHERE POSSIBLE.
14. CONNECT CONDUIT TO MOTOR CONDUIT TERMINAL BOXES WITH FLEXIBLE CONDUIT (MINIMUM 18 IN. LENGTH AND 50% SLACK). DO NOT TERMINATE IN OR FASTEN RACEWAYS TO MOTOR FOUNDATION.
15. PROVIDE SEPARATE RACEWAYS FOR CONDUCTORS OF NORMAL AND EMERGENCY CIRCUITS. COMMON BOXES: PROVIDE BARRIERS BETWEEN EMERGENCY AND NORMAL WIRING.
16. LEAVE WIRE SUFFICIENTLY LONG TO PERMIT MAKING FINAL CONNECTIONS
17. WIRE COLOR CODING: PER CODE. WHERE COLOR–CODED CABLE IS NOT AVAILABLE, CERTIFY IN WRITING AND REQUEST PERMISSION FOR OVERLAP COLOR TAPING OF CONDUCTORS (MINIMUM LENGTH 6") IN ACCESSIBLE LOCATIONS. COLOR CODING, ONCE SELECTED, MUST BE USED CONSISTENTLY FOR THE ENTIRE PROJECT
18. PULL NO THERMOPLASTIC WIRES AT TEMPERATURES LOWER THAN 32°F (0°C). PROVIDE CABLE SUPPORTS FOR WIRE IN RISER CONDUITS AS REQUIRED BY CODE.
19. SET BOXES SQUARE AND TRUE WITH BUILDING FINISH. ERECT WALL AND SWITCH OUTLETS IN ADVANCE OF FURRING AND FIREPROOFING. SECURE TO BUILDING STRUCTURE BY ADJUSTABLE STRAP IRONS.
20. VERIFY EXACT LOCATIONS AND MOUNTING HEIGHT OF ALL LIGHT FIXTURES, SWITCHES, RECEPTACLES, OUTLETS, FIRE ALARM DEVICES, VOICE/DATA DEVICES AND OTHER EQUIPMENT WITH ARCHITECTURAL DRAWINGS AND IN THE FIELD PRIOR TO ROUGH–IN. IN CENTERING OUTLETS AND LOCATION BOXES AND OUTLETS, ALLOW FOR OVERHEAD PIPES, DUCTS AND MECHANICAL EQUIPMENT VARIATIONS IN FIREPROOFING AND PLASTERING, WINDOW AND DOOR TRIM, PANELING, HUNG CEILINGS AND THE LIKE, AND CORRECT ANY INACCURACY RESULTING FROM FAILURE TO DO SO WITHOUT EXPENSE TO OWNER.
21. A "+" SYMBOL NEXT TO A DEVICE INDICATES A NON–STANDARD DEVICE MOUNTING HEIGHT – CONTRACTOR SHALL COORDINATE EXACT MOUNTING HEIGHT PRIOR TO ROUGH–IN.
22. LOCATIONS INDICATED FOR LOCAL WALL SWITCHES ARE SUBJECT TO MODIFICATIONS AT OR NEAR DOORS. COORDINATE WITH ARCHITECT AND INSTALL SWITCH ON SIDE OPPOSITE HINGE. VERIFY FINAL HINGE LOCATIONS IN FIELD PRIOR TO SWITCH OUTLET INSTALLATION.
23. PROVIDE PULL BOXES AS INDICATED AND WHEREVER NECESSARY TO FACILITATE PULLING OF WIRE AND COORDINATE LOCATIONS WITH OTHER TRADES.
24. FOR EMPTY RACEWAY RUNS, PROVIDE PULL BOXES EVERY 100FT AND AS INDICATED. COORDINATE LOCATIONS WITH OTHER TRADES.
25. JUNCTION AND PULL BOXES: LOCATE GENERALLY NOT EXPOSED IN FINISHED SPACES. WHERE NECESSARY, REROUTE CONDUITS OR MAKE OTHER ARRANGEMENTS FOR CONCEALMENT. COVERS OF JUNCTION AND PULL BOXES SHALL BE ACCESSIBLE.
26. SUPPORT JUNCTION AND PULL BOXES INDEPENDENTLY TO BUILDING STRUCTURE WITH NO WEIGHT BEARING ON CONDUITS.
27. ALL ACCESS DOOR LOCATIONS SHALL BE REVIEWED BY ARCHITECT PRIOR TO INSTALLATION.
28. FIRESTOPPING SHALL BE INSTALLED WHENEVER WIRING OR RACEWAYS CROSS FIRE RATED CONSTRUCTION.
29. THE FINAL ACCEPTANCE WILL BE MADE AFTER THE CONTRACTOR HAS ADJUSTED HIS EQUIPMENT, BALANCES THE VARIOUS SYSTEMS, DEMONSTRATED THAT IT FULFILLS THE REQUIREMENTS OF THE DRAWINGS AND SPECIFICATIONS, AND HAS FURNISHED ALL THE REQUIRED CERTIFICATES OF INSPECTION, SHOP AND RECORD DRAWINGS AND APPROVALS.
30. DEMONSTRATE PERFORMANCE AND CAPACITY OF ALL SYSTEMS AND EQUIPMENT.
31. AT COMPLETION OF PROJECT, PROVIDE NEW UPDATED TYPE WRITTEN PANELBOARD DIRECTORIES FOR ALL NEW PANELBOARDS AND ANY EXISTING PANELBOARDS THAT HAVE BEEN MODIFIED.
32. PROVIDE REPRODUCIBLE "AS BUILT" DRAWINGS INDICATING AS–INSTALLED CONDITIONS AFTER COMPLETION OF THE INSTALLATION.
33. THE CONTRACTOR SHALL GUARANTEE AND SERVICE THE ENTIRE INSTALLATION FOR A PERIOD OF ONE YEAR FROM THE DATE OF THE FINAL ACCEPTANCE OF THE INSTALLATION.
34. THE CONTRACTOR SHALL, DURING THE PERIOD OF THE GUARANTEE, REPLACE OR REPAIR AT HIS OWN EXPENSE ANY PIECE OF EQUIPMENT AND/OR MATERIAL WHICH IS FOUND TO BE DEFECTIVE. THE REPLACEMENT OR REPAIR SHALL BE DONE AS SOON AS NOTIFIED BY THE ENGINEER OR AUTHORIZED REPRESENTATIVE. THE CONTRACTOR SHALL ALSO REPAIR ALL DAMAGE TO SURROUNDING WORK CAUSED BY THE FAILURE, REPAIR OR REPLACEMENT OF DEFECTIVE EQUIPMENT.
35. THE CONTRACTOR SHALL COORDINATE LOCATION(S) OF ALL PLENUM RATED SPACE(S) WITH THE MC. EC SHALL PROVIDE METAL CONDUIT OR MC CABLE WITHIN PLENUM RATED SPACE(S).
36. THESE DRAWINGS HAVE BEEN DESIGNED AND ENGINEERED BASED ON VISUAL INSPECTIONS OF THE EXISTING BUILDING AND INFRASTRUCTURE PRIOR TO ANY DEMOLITION. SOME ASSUMPTIONS HAVE BEEN MADE AS TO ACTUAL CONSTRUCTION, MATERIALS, AND METHODS. THE CONTRACTOR SHALL BE RESPONSIBLE FOR VERIFYING ALL ACTUAL FIELD CONDITIONS AND SHALL NOTIFY THE OWNER AND ENGINEER OF ANY DISCREPANCIES, CONFLICTS, AND UNFORESEEN CONDITIONS.

GENERAL FIRESTOPPING NOTE

CONTRACTOR SHALL BE RESPONSIBLE FOR MAINTAINING OR EXCEEDING WALL/CEILING/FLOOR FIRE ASSEMBLY RATINGS FOR ALL PENETRATIONS. CONTRACTOR SHALL VERIFY LOCATION AND RATING OF ALL FIRE ASSEMBLIES AND PROVIDE INTUMESCENT COLLARS AT ALL PENETRATIONS AND/OR FIRE RATED CAULKING AS REQUIRED.

COMMISSIONING REQUIREMENTS

1. THE CONTRACTOR SHALL BE RESPONSIBLE FOR PROVIDING COMMISSIONING SERVICE, FROM A CERTIFIED COMMISSIONING AUTHORITY (CxA), FOR ALL LIGHTING CONTROLS.
2. CxA AND CONTRACTOR SHALL PERFORM AND REVIEW ALL TESTING AND PROVIDE REPORTS AS REQUIRED.
3. ALL COMMISSIONING AND REPORTING SHALL BE PREFORMED IN ACCORDANCE WITH ASHRAE GUIDELINE 90.1–2019 AND IECC–2021.

TYPICAL DEVICE MOUNTING HEIGHTS DETAIL

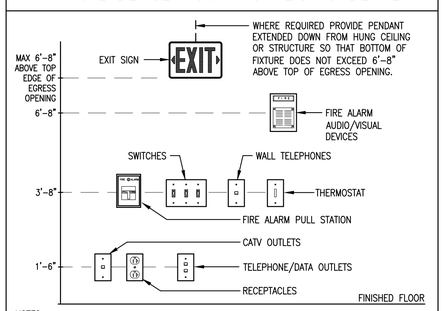

NOTES:

1. ALL MOUNTING HEIGHTS SHALL BE MEASURED FROM FINISHED FLOOR TO CENTERLINE OF DEVICE EXCEPT EXIT SIGNS. EXIT SIGNS SHALL COMPLY WITH NFPA 101, 7.10.1.9.
2. DEVICES SHALL BE INSTALLED ON A COMMON VERTICAL CENTERLINE WHEREVER POSSIBLE.
3. ALL DEVICES SHALL BE INSTALLED AT MOUNTING HEIGHTS AS INDICATED ON THIS DETAIL UNLESS OTHERWISE NOTED OR REQUIRED BY CODE (INCLUDING ADA REQUIREMENTS). FOR DEVICES INDICATED WITH AN ADJACENT "+" SYMBOL, COORDINATE MOUNTING HEIGHT WITH ARCHITECT.
4. COORDINATE ALL LOCATIONS WITH ARCHITECTURAL PLANS.
5. OPERABLE DEVICES INSTALLED IN ALL ACCESSIBLE COMMON AREAS SHALL BE MOUNTED BETWEEN 15" & 44" AFF AND/OR IN ACCORDANCE WITH ANSI A117.1 REQUIREMENTS – CONFIRM EXACT MTG HT AND LOCATION WITH ARCHITECT.

Bowman
457 OAKSHADE ROAD
SHAMONG, NJ 08088
(609)-268-0500
WWW.BOWMAN.COM

PROJECT
THE COLLEGE OF NEW JERSEY - EICKHOFF HALL
2000 PENNINGTON ROAD
EWING, NJ 08628

TITLE
ELECTRICAL COVERSHEET

CONTRACTOR SHALL CHECK & VERIFY ALL DIMENSIONS AND FIELD CONDITIONS PRIOR TO STARTING CONSTRUCTION.

REV:	DESC:	DATE:

DRAWN BY:	
CHECKED BY:	
DATE:	03/28/2025
SCALE:	AS NOTED

JOB NO. 25033

E0.00

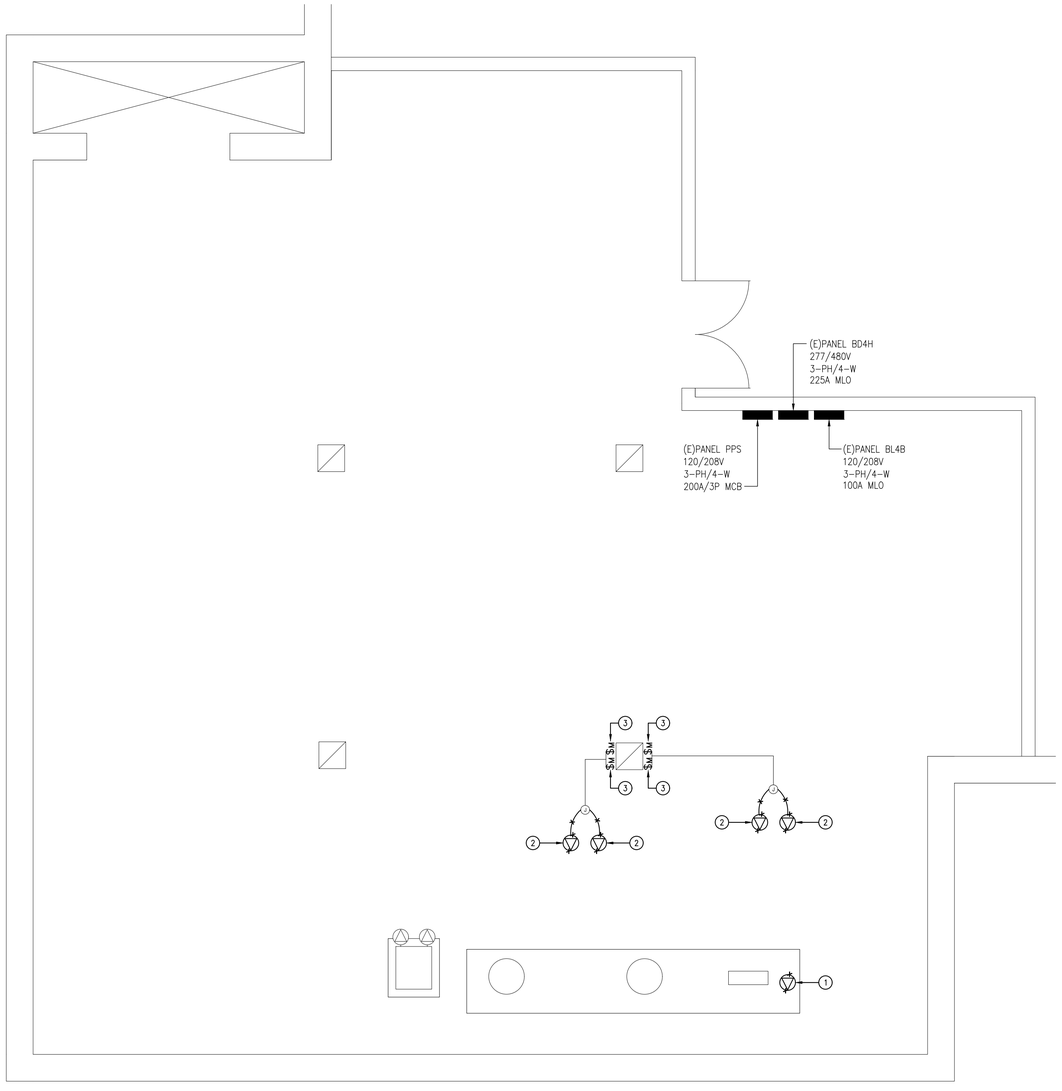

01 ELECTRICAL – LOWER LEVEL – DEMOLITION

SCALE: 1/4" = 1'-0"

ELECTRICAL DEMOLITION NOTES:

1. THE CONTRACTOR SHALL INCLUDE IN HIS BID ALL COSTS ASSOCIATED WITH RELOCATION AND REMOVAL OF ELECTRICAL WORK AS DESCRIBED IN THE SPECIFICATIONS WITH ALLOWANCES FOR EXPECTED OR UNFORESEEN ISSUES WHEN CONCEALED WORK HAS BEEN EXPOSED. NO ADDITIONAL CLAIMS FOR WORK ASSOCIATED WITH DEMOLITION WILL BE ACCEPTED, UNLESS, IN CERTAIN CASES, CONSIDERED JUSTIFIABLE BY THE ARCHITECT.
2. THE CONTRACTOR SHALL PERFORM REMOVAL AND DEMOLITION WORK WITH MINIMAL INTERFERENCE WITH EXISTING ELECTRICAL SYSTEMS. ALL AFFECTED ELECTRICAL SYSTEMS SHALL BE RESTORED AND RECONNECTED.
3. DEMOLITION AND REMOVAL WORK SHALL BE PERFORMED IN A NEAT AND WORKMANLIKE MANNER. THE CONTRACTOR SHALL PATCH, REPAIR, PAINT OR OTHERWISE RESTORE ANY DAMAGED INTERIOR OR EXTERIOR BUILDING SURFACE TO ITS ORIGINAL CONDITION.
4. EXISTING PANELBOARD DIRECTORIES AFFECTED BY THE ALTERATION WORK SHALL BE CHANGED TO REFLECT THE BRANCH CIRCUIT WIRING MODIFICATIONS.
5. ALL UNUSED OUTLET BOXES OR CAPPED FLOOR OUTLETS SHALL BE PROVIDED WITH MATCHING BLANK COVERS.
6. PORTIONS OF FEEDER RUNS THAT SHALL BE REMOVED OR ABANDONED AS A RESULT OF DEMOLITION WORK, BUT WHICH ARE REQUIRED TO REMAIN ENERGIZED, SHALL BE CUT AT CONVENIENT LOCATIONS, REROUTED AND RECONNECTED. NEW FEEDER EXTENSIONS SHALL MATCH EXISTING FEEDER EXTENSIONS IN ALL ASPECTS INCLUDING BUT NOT LIMITED TO CABLE TYPE, CONDUIT SIZES, CONDUCTOR AMPACITY, ETC.
7. AS DIRECTED BY THE OWNER, ALL EXISTING EQUIPMENT AND MATERIAL IN USABLE CONDITION THAT IS REMOVED UNDER THIS CONTRACT SHALL REMAIN THE PROPERTY OF THE OWNER OR BE DISPOSED BY THE ELECTRICAL CONTRACTOR.
8. THE CONTRACTOR SHALL NOTIFY THE OWNER AT THE APPROPRIATE TIME OF THE PROJECTED DEMOLITION AND PHASING SCHEDULE SO THAT REMOVAL OR RELOCATION OF AFFECTED UTILITIES MAY BE CARRIED OUT IN COORDINATION WITH THE PROJECT REQUIREMENTS. THE CONTRACTOR SHALL FOLLOW CLOSELY THE ARCHITECT'S DEMOLITION AND PHASING SCHEDULE AND PROCEED IN THE SPECIFIED SEQUENCE.

ELECTRICAL DEMOLITION KEY NOTES:

1. DISCONNECT EXISTING SYSTEM CIRCULATION PUMP AND ALL ASSOCIATED ELECTRICAL APPURTENANCES BACK TO SOURCE PANEL FOR PUMP REMOVAL BY OTHERS
2. DISCONNECT AND REMOVE EXISTING OVERHEAD DOMESTIC HOT WATER RECIRCULATION PUMP MC CABLE WIRING BACK TO (E)OVERHEAD JUNCTION BOX FOR PUMP REPLACEMENT BY OTHERS. JUNCTION BOX AND REMAINING EXISTING WIRING BACK TO SOURCE SHALL REMAIN FOR RE-USE.
3. DISCONNECT AND REMOVE (ER)MOTOR-RATED TOGGLE SWITCH AND BACK BOX CURRENTLY SERVING OVERHEAD DOMESTIC HOT WATER RECIRCULATION PUMP FOR REPLACEMENT. (E)WIRING SHALL REMAIN FOR RE-USE.

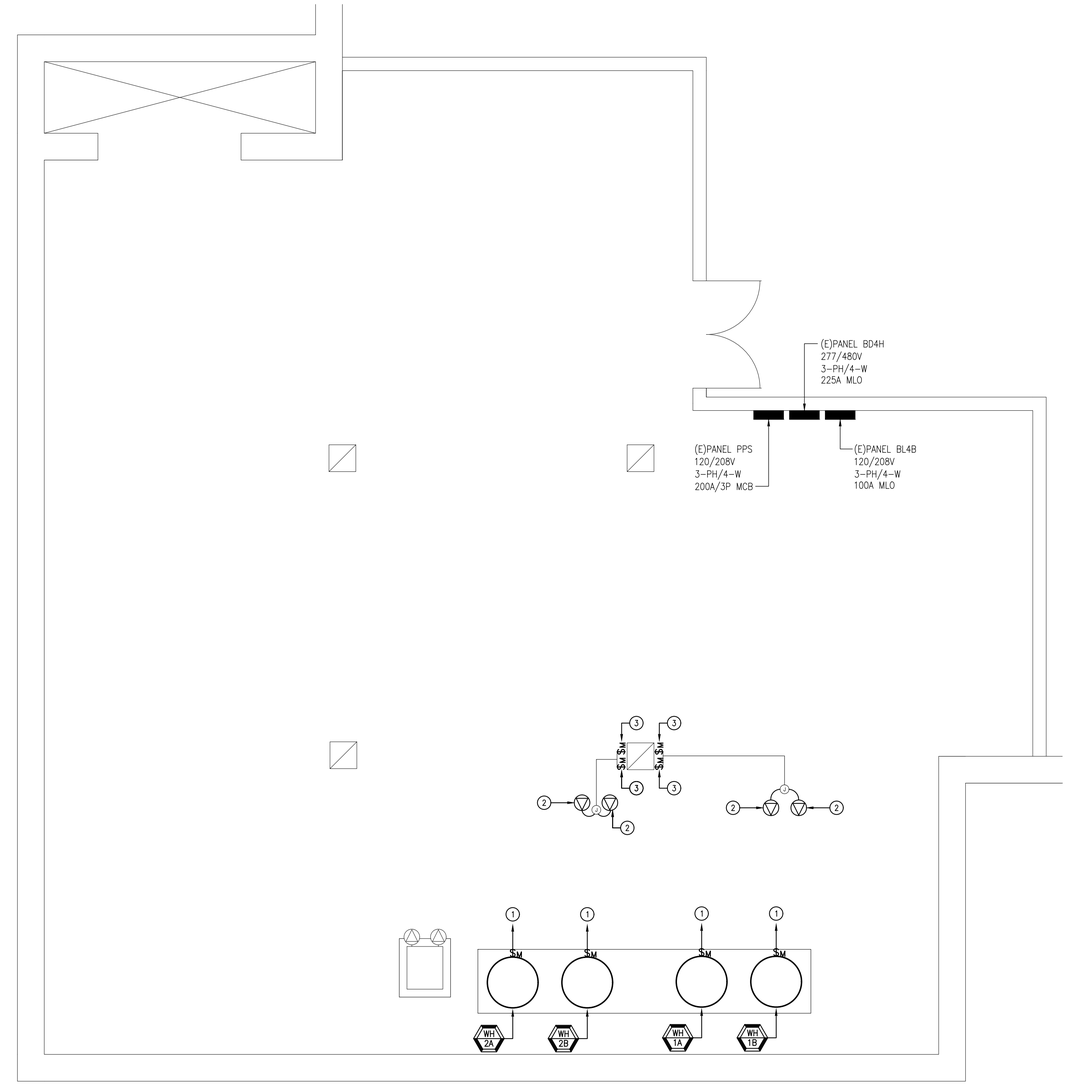

02 ELECTRICAL – LOWER LEVEL – NEW WORK

SCALE: 1/4" = 1'-0"

ELECTRICAL NEW WORK NOTES:

1. CONFIRM ALL DEVICE AND EQUIPMENT LOCATIONS WITH THE OWNER PRIOR TO ANY PURCHASE OR ROUGH-IN.
2. CONFIRM ALL POWER OVERCURRENT PROTECTION, WIRING AND DEVICE/DISCONNECT REQUIREMENTS FOR ALL EQUIPMENT PRIOR TO ROUGH-IN AND REPORT ANY DISCREPANCY WITH THE DESIGN TO THE engineer AND OWNER FOR RESOLUTION.
3. PROVIDE ALL DISCONNECT SWITCHES AS HEAVY-DUTY TYPE RATED WITH VOLTAGE AS REQUIRED AND AMPS, FUSING AND POLES AS INDICATED. DISCONNECT SWITCHES FOR INTERIOR EQUIPMENT SHALL BE NEMA 1 RATED UON. DISCONNECT SWITCHES FOR EXTERIOR EQUIPMENT SHALL BE WEATHERPROOF LOCKABLE HEAVY DUTY TYPE, NEMA 3R UON.
4. COORDINATE ALL MECHANICAL AND PLUMBING EQUIPMENT LOCATIONS AND CONNECTIONS PRIOR TO ANY PURCHASE OR ROUGH-IN.
5. THESE DRAWINGS HAVE BEEN MADE BASED ON A VISUAL INSPECTION OF THE EXISTING SURFACES. SOME ASSUMPTIONS HAVE BEEN MADE AS TO ACTUAL CONSTRUCTION, MATERIALS, AND METHODS. THE INSTALLER SHALL BE RESPONSIBLE FOR VERIFYING ALL ACTUAL FIELD CONDITIONS AND SHALL NOTIFY THE ENGINEER AND OWNER OF ANY DISCREPANCIES, CONFLICTS, AND UNFORESEEN CONDITIONS.
6. EC SHALL FIRE CAULK ALL EXISTING AND NEW CONDUIT PENETRATIONS IN FIRE WALLS WITHIN CONTRACT AREA TO MAINTAIN FIRE WALL RATING.
7. ALL CONDUITS TRAVELING FROM OUTDOORS TO INDOORS AND FROM A WARM ENVIRONMENT TO COLD SHALL BE VAPOR SEALED TO PREVENT CONDENSATION BUILDUP. THE SEAL SHALL BE A CONDUIT BODY OR JUNCTION BOX LOCATED ON THE HIGH TEMPERATURE SIDE OF THE TRANSITION SEALED WITH ELECTRICAL DUCT SEAL OR A NON-LATEX, CLOSED CELL, EXPANDING FOAM SEALANT LISTED FOR THE PURPOSE, INSTALLED IN THE CONDUIT ENTERING THE COLDER SPACE.

ELECTRICAL NEW WORK KEY NOTES:

1. FEED NEW WATER HEATER FROM A (N)15A/1P CB IN (E)PANEL PP2 VIA 2#12+1#12G., 3/4" C. PROVIDE (N)MOTOR-RATED DISCONNECT SWITCH AT WATER HEATER FOR DISCONNECTING MEANS. UPDATE PANEL SCHEDULE TO MATCH PUMP TAG. COORDINATE ALL FINAL EQUIPMENT LOCATIONS WITH PLUMBING/MECHANICAL CONTRACTORS.
2. EXTEND 2#12+1#12, MC CABLE FROM (E)JUNCTION BOX TO NEW DOMESTIC HOT WATER RECIRCULATION PUMP. CONNECT TO (E)120V CIRCUIT REMAINING IN (E)JUNCTION BOX FROM DEMOLITION OF OLD PUMP.
3. PROVIDE NEW SURFACE-MOUNTED MOTOR-RATED TOGGLE-TYPE DISCONNECT SWITCH IN LOCATION OF DEMOLISHED PUMP MOTOR DISCONNECT SWITCH AND RECONNECT (E)WIRING FOR NEW PUMP DISCONNECTING MEANS. PROVIDE PERMANENT PHENOLIC TAG ON SWITCH HOUSING INDICATING PUMP BEING SERVED.

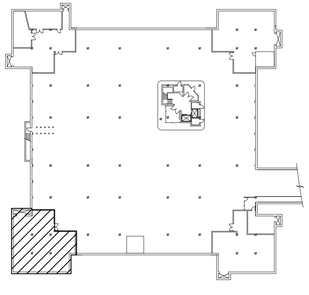

N LOWER LEVEL KEY PLAN
SCALE: N.T.S.

Bowman
457 OAKSHADE ROAD
SHAMONG, NJ 08088
(609)-268-0500
WWW.BOWMAN.COM

PROJECT
THE COLLEGE OF NEW JERSEY - EICKHOFF HALL
2000 PENNINGTON ROAD
EWING, NJ 08628

TITLE
ELECTRICAL - LOWER LEVEL - DEMO & NEW WORK PLANS

CONTRACTOR SHALL CHECK & VERIFY ALL DIMENSIONS AND FIELD CONDITIONS PRIOR TO STARTING CONSTRUCTION.

REV:	DESC:	DATE:

DRAWN BY:	KHP
CHECKED BY:	JAM
DATE:	03/28/2025
SCALE:	AS NOTED

JOB NO. 25033

E1.00

ELECTRICAL SPECIFICATIONS

1. GENERAL

A. THE "GENERAL CONDITIONS OF THE CONTRACT FOR CONSTRUCTION," AIA DOCUMENT A201, LATEST EDITION, AND THESE SPECIFICATIONS AS APPLICABLE ARE PART OF THIS CONTRACT.

B. ALL APPLICABLE CODES, LAWS, REGULATIONS AND STANDARDS GOVERNING OR RELATING TO ANY PORTION OF THIS WORK ARE HEREBY INCORPORATED INTO AND MADE A PART OF THESE SPECIFICATIONS, AND THEIR PROVISIONS SHALL BE CARRIED OUT BY THE CONTRACTOR WHO SHALL INFORM THE OWNER, PRIOR TO SUBMITTING A PROPOSAL, OF ANY WORK OR MATERIAL WHICH VIOLATES ANY OF THE ABOVE LAWS AND REGULATIONS. ANY WORK DONE BY THE CONTRACTOR CAUSING SUCH VIOLATION SHALL BE CORRECTED BY THE CONTRACTOR.

C. INVESTIGATE EACH SPACE THROUGH WHICH EQUIPMENT MUST BE MOVED. WHERE NECESSARY, EQUIPMENT SHALL BE SHIPPED FROM MANUFACTURER IN SECTIONS OF SIZE SUITABLE FOR MOVING THROUGH AVAILABLE RESTRICTIVE SPACES. ASCERTAIN FROM BUILDING OWNER AND TENANT AT WHAT TIMES OF DAY EQUIPMENT MAY BE MOVED THROUGH ALL AREAS.

D. DRAWINGS ARE DIAGRAMMATIC AND INDICATE GENERAL ARRANGEMENT OF SYSTEMS AND WORK. CONDUIT ROUTING IS SHOWN DIAGRAMMATICALLY AND DOES NOT SHOW ALL OFFSETS, DROPS AND RISES OF RUNS. THE CONTRACTOR SHALL ALLOW IN HIS PRICE FOR ROUTING OF CONDUIT TO AVOID OBSTRUCTIONS. COORDINATION WITH EXISTING SERVICES, INCLUDING THOSE OF OTHER TRADES, IS REQUIRED. MAINTAIN HEADROOM AND SPACE CONDITIONS.

E. INSTALL WORK SO AS TO BE READILY ACCESSIBLE FOR OPERATION, MAINTENANCE AND REPAIR. MINOR DEVIATIONS FROM DRAWINGS MAY BE MADE TO ACCOMPLISH THIS, BUT CHANGES, WHICH INVOLVE EXTRA COST, SHALL NOT BE MADE WITHOUT APPROVAL.

F. REMOVAL AND RELOCATION OF CERTAIN EXISTING WORK MAY BE NECESSARY FOR THE PERFORMANCE OF THE GENERAL WORK. ALL EXISTING CONDITIONS CANNOT BE COMPLETELY DETAILED ON THE DRAWINGS. THE CONTRACTOR SHALL SURVEY THE SITE AND INCLUDE ALL CHANGES AND CHARGES IN MAKING UP THE WORK PROPOSAL.

G. CONNECTIONS TO EXISTING WORK: INSTALL NEW WORK AND CONNECT TO EXISTING WORK WITH MINIMUM INTERFERENCE TO EXISTING FACILITIES. TEMPORARY SHUTDOWNS OF EXISTING SERVICES SHALL BE PERFORMED AT NO ADDITIONAL CHARGES, AT TIMES NOT TO INTERFERE WITH NORMAL OPERATION OF EXISTING FACILITIES AND ONLY WITH WRITTEN CONSENT OF OWNER. ALARM AND EMERGENCY SYSTEMS SHALL NOT BE INTERRUPTED. MAINTAIN CONTINUOUS OPERATION OF EXISTING FACILITIES AS REQUIRED WITH NECESSARY TEMPORARY CONNECTIONS BETWEEN NEW AND EXISTING WORK. CONNECT NEW WORK TO EXISTING WORK IN NEAT AND ACCEPTABLE MANNER. RESTORE EXISTING DISTURBED WORK TO ORIGINAL CONDITION, INCLUDING MAINTENANCE OF WIRING CONTINUITY AS REQUIRED.

H. DISCONNECT, REMOVE AND/OR RELOCATE EXISTING MATERIAL, EQUIPMENT AND OTHER WORK AS NOTED OR REQUIRED FOR PROPER INSTALLATION OF NEW WORK.

I. THE CONTRACTOR SHALL KEEP ALL EQUIPMENT AND MATERIALS, AND ALL PARTS OF THE BUILDING, EXTERIOR SPACES AND ADJACENT STREETS, SIDEWALKS AND PAVEMENTS, FREE FROM MATERIAL AND DEBRIS RESULTING FROM THE EXECUTION OF THIS WORK. EXCESS MATERIALS WILL NOT BE PERMITTED TO ACCUMULATE EITHER ON THE INTERIOR OR THE EXTERIOR.

J. SEAL OPENINGS THROUGH PARTITIONS, WALLS AND FLOORS WITH MINERAL WOOL OR OTHER NONCOMBUSTIBLE MATERIAL. ALL PENETRATIONS THROUGH NEW AND EXISTING RATED FIRE AND SMOKE PARTITIONS AND/OR FLOORS SHALL BE COMPLETELY SEALED USING MATERIALS AND METHODS DESCRIBED IN SUBSEQUENT "FIRE STOPPING" SPECIFICATIONS SECTIONS.

K. PROVIDE ALL NECESSARY EQUIPMENT CURBS AS REQUIRED.

L. ALL EXISTING MATERIAL, EQUIPMENT AND CONSTRUCTION DEBRIS BEING REMOVED UNDER THIS CONTRACT SHALL BECOME THE PROPERTY OF THE CONTRACTOR WITH THE EXCEPTION OF SPECIFIC EQUIPMENT AND APPARATUS REQUESTED BY THE BUILDING REPRESENTATIVE, ARCHITECT OR AS NOTED TO BE RELOCATED ON THE DRAWINGS. REMOVED EQUIPMENT SHALL BE PROPERLY DISPOSED OF BY THIS CONTRACTOR.

M. THE WORK IN THE BUILDING SHALL BE DONE WHEN AND AS DIRECTED, IN A MANNER SATISFACTORY TO THE OWNER. THE WORK SHALL BE PERFORMED SO AS TO CAUSE THE LEAST POSSIBLE INCONVENIENCE AND DISTURBANCE TO THE PRESENT OCCUPANTS.

N. THE CONTRACTOR'S PROPOSAL FOR ALL WORK SHALL BE PREDICATED ON THE PERFORMANCE OF THE WORK DURING REGULAR WORKING HOURS. WHEN SO DIRECTED, HOWEVER, THE CONTRACTOR SHALL INSTALL WORK DURING OVERTIME HOURS AND THE ADDITIONAL COST TO BE CHARGED THEREFORE SHALL BE ONLY THE "PREMIUM" PORTION OF THE WAGES PAID.

O. UNLESS OTHERWISE SPECIFICALLY NOTED OR SPECIFIED, INCLUDE ALL CUTTING AND PATCHING OF EXISTING FLOORS, WALLS, PARTITIONS AND OTHER MATERIALS IN THE EXISTING BUILDING. THE CONTRACTOR SHALL RESTORE THESE AREAS TO ORIGINAL CONDITION.

P. ALL MATERIAL AND EQUIPMENT SHALL BE NEW UNLESS OTHERWISE NOTED AND SHALL BE IN ACCORDANCE WITH BUILDING STANDARDS.

Q. SUBMISSION OF A PROPOSAL SHALL BE CONSTRUED AS EVIDENCE THAT A CAREFUL EXAMINATION OF THE PORTIONS OF THE EXISTING BUILDING, EQUIPMENT, ETC., WHICH AFFECT THIS WORK, AND THE ACCESS TO SUCH SPACES, HAS BEEN MADE AND THAT THE CONTRACTOR IS FAMILIAR WITH EXISTING CONDITIONS AND DIFFICULTIES THAT WILL AFFECT THE EXECUTION OF THE WORK. THE CONTRACTOR IS RESPONSIBLE TO INDICATE ANY DISCREPANCIES BETWEEN THE CONTRACT DRAWINGS AND ACTUAL FIELD CONDITIONS PRIOR TO SUBMITTAL OF BID. SUBMISSION OF A PROPOSAL WILL BE CONSTRUED AS EVIDENCE THAT SUCH AN EXAMINATION HAS BEEN MADE. LATER CLAIMS SHALL NOT BE MADE FOR LABOR; EQUIPMENT OR MATERIALS REQUIRED BECAUSE OF DIFFICULTIES ENCOUNTERED WHICH COULD HAVE BEEN FORESEEN DURING SUCH AN EXAMINATION. THE ON-SITE INSPECTION SHALL VERIFY EXISTING CONDUIT (SIZES, CLEARANCES, ETC) AND CONDITIONS.

R. WHERE VARINCES OCCUR BETWEEN THE DRAWINGS AND THE SPECIFICATIONS OR WITHIN EITHER DOCUMENT ITSELF, THEITEMS/ARRANGEMENT OF BETTER QUEALITY, GREATER QUANTITY OR HIGHER COST SHALL BE INCLUDED IN THE CONTRACT PRICE. THE CONTRACTOR SHALL REQUEST CLARIFICATION IN WRITING FROM THE ARCHTECT ON WHICH ITEM AND MANNER IN WHICH THE SHALL BE INSTALLED.

S. INSURANCE: IN ACCORDANCE WITH BUILDING REQUIREMENTS AND SHALL INCLUDE A HOLD HARMLESS CLAUSE FOR OWNER AND ENGINEER.

T. THE FINAL ACCEPTANCE SHALL BE MADE AFTER THE CONTRACTOR HAS ADJUSTED HIS EQUIPMENT, TESTED THE VARIOUS SYSTEMS, DEMONSTRATED THAT IT FULFILLS THE REQUIREMENTS OF THE DRAWINGS AND SPECIFICATIONS AND HAS FURNISHED ALL THE REQUIRED CERTIFICATES OF INSPECTION AND APPROVAL.

2. SCOPE OF WORK

A. SCOPE OF WORK SHALL CONSIST OF PROVIDING LABOR, MATERIALS, EQUIPMENT, SERVICES AND FEES NECESSARY FOR COMPLETE AND SAFE INSTALLATION IN CONFORMITY WITH THE NATIONAL ELECTRICAL CODE (NEC) AND ALL OTHER APPLICABLE INDUSTRY, NATIONAL AND LOCAL CODES, ALL UNIVERSITY REQUIREMENTS AND AUTHORITIES HAVING JURISDICTION, AS INDICATED ON DRAWINGS AND HEREIN SPECIFIED.

B. ALL DRAWINGS, PLANS, DETAILS, SPECIFICATIONS AND SPECIFICATION ADDENDA ARE MADE PART OF THIS CONTRACT AND SHALL APPLY TO ALL WORK UNDER THE CONTRACT UNLESS OTHERWISE AMENDED, MODIFIED, SUPPLEMENTED OR SPECIFIED HEREIN.

C. THE CONTRACTOR SHALL FURNISH A WRITTEN GUARANTEE TO REPLACE OR REPAIR PROMPTLY AND ASSUME RESPONSIBILITY FOR ALL EXPENSES INCURRED FOR ANY WORKMANSHIP AND EQUIPMENT IN WHICH DEFECTS DEVELOP WITHIN ONE YEAR FROM THE DATE OF FINAL CERTIFICATE FOR PAYMENT AND/OR FROM DATE OR ACTUAL USE OF EQUIPMENT OR OCCUPANCY OF SPACES BY OWNER INCLUDED UNDER THE VARIOUS PARTS OF THE WORK, WHICHEVER DATE IS EARLIER. THIS WORK SHALL BE DONE AS DIRECTED BY THE OWNER. THIS GUARANTEE SHALL ALSO PROVIDE THAT WHERE DEFECTS OCCUR, THE CONTRACTOR WILL ASSUME RESPONSIBILITY FOR ALL EXPENSES INCURRED IN REPAIRING AND REPLACING WORK OF OTHER TRADES AFFECTED BY DEFECTS, REPAIRS OR REPLACEMENTS IN EQUIPMENT SUPPLIED BY THE CONTRACTOR.

D. THE CONTRACTOR SHALL GIVE NECESSARY NOTICE, FILE DRAWINGS AND SPECIFICATIONS WITH ALL DEPARTMENTS HAVING JURISDICTION, OBTAIN PERMITS OR LICENSES NECESSARY TO CARRY OUT THIS WORK AND PAY ALL FEES THEREFORE. THE CONTRACTOR SHALL ARRANGE FOR INSPECTION AND TESTS OF ANY OR ALL PARTS OF THE WORK IF SO REQUIRED BY AUTHORITIES AND PAY ALL CHARGES FOR SAME. THE CONTRACTOR SHALL PAY ALL COSTS FOR, AND FURNISH TO THE OWNER BEFORE FINAL BILLING, ALL CERTIFICATES NECESSARY AS EVIDENCE THAT THE WORK INSTALLED CONFORMS WITH ALL REGULATIONS WHERE THEY APPLY TO THIS WORK.

3. SHOP DRAWINGS AND SUBMITTALS

A. PRIOR TO THE INSTALLATION OF ANY WORK AND PROCUREMENT OF EQUIPMENT, CONTRACTOR SHALL PROVIDE COMPLETE SETS OF COORDINATED SHOP DRAWINGS OF ALL NEW AND EXISTING EQUIPMENT, INDICATING CAPACITY, DIMENSIONS AND SEQUENCE OF OPERATION FOR WRITTEN APPROVAL BY THE ARCHITECT AND ENGINEER.

B. INDICATE ON EACH SUBMISSION:

1) PROJECT NAME AND LOCATION

2) NAME OF OWNER AND ENGINEER

3) ITEM IDENTIFICATION

4) APPROVAL STAMP OF PRIME CONTRACTOR INDICATING FULL REVIEW

C. SUBMISSIONS

1) ELECTRONIC CATALOG AND DRAWING SUBMISSIONS SHALL BE IN PDF FORMAT. CATALOG SUBMISSIONS SHALL BE COMPLETE WITH ALL REQUIRED CHOICES AND OPTIONS INDICATED AS REQUIRED

2) HARD COPY SUBMISSIONS: SUBMIT THREE PRINTS TO THE OWNER. THE OWNER WILL FORWARD TWO PRINTS TO THE ENGINEER.

D. SUBMIT SHOP DRAWINGS FOR THE:

1) DISCONNECT SWITCHES

2) CIRCUIT BREAKERS

3) RACEWAYS

4) WIRE AND CABLE

5) CONDUIT AND FITTINGS

4. AS-BUILT DRAWINGS AND EQUIPMENT OPERATIONAL INSTRUCTIONS

A. UPON COMPLETION AND ACCEPTANCE OF WORK, CONTRACTOR SHALL FURNISH WRITTEN INSTRUCTIONS AND EQUIPMENT MANUALS AND DEMONSTRATE TO THE OWNER THE PROPER OPERATION AND MAINTENANCE OF ALL EQUIPMENT AND APPARATUS FURNISHED UNDER THIS CONTRACT.

B. THESE INSTRUCTIONS SHALL BE TYPED ON 8-1/2 IN. X 11 IN. PAPER AND BOUND IN THREE RING BINDERS WITH CLEAR ACETATE COVERS. CONTRACTOR SHALL GIVE THREE COPIES OF THE INSTRUCTIONS TO THE OWNER AND ONE COPY TO THE ENGINEER.

C. THE INSTRUCTION BOOKLET SHALL BEAR THE NAME, ADDRESS AND TELEPHONE NUMBER OF THE PROJECT, ARCHITECT AND ENGINEER.

D. REPRODUCIBLE "AS-BUILT" DRAWINGS PREPARED IN COMPUTER AIDED DRAFTED (AUTO CAD) FORMAT SHALL BE PROVIDED TO THE OWNER INDICATING THE AS INSTALLED CONDITIONS OF THE WORK. A COMPLETE "AS-BUILT" DRAWING FILE SHALL BE PROVIDED TO THE OWNER AFTER COMPLETION OF THE INSTALLATION.

5. GENERAL PROVISIONS FOR ELECTRICAL WORK

A. SPECIFICATIONS ARE OF SIMPLIFIED FORM AND INCLUDE INCOMPLETE SENTENCES. WORDS OR PHRASES SUCH AS "THE CONTRACTOR SHALL," "SHALL BE," "FURNISH," "PROVIDE," "A," "THE," AND "ALL" HAVE BEEN OMITTED FOR BREVITY.

B. DEFINITIONS

1) "PROVIDE": TO SUPPLY, INSTALL AND CONNECT UP COMPLETE AND READY FOR SAFE AND REGULAR OPERATION THE PARTICULAR WORK REFERRED TO UNLESS SPECIFICALLY OTHERWISE NOTED.

2) "INSTALL": TO ERECT, MOUNT AND CONNECT COMPLETE WITH RELATED ACCESSORIES.

3) "FURNISH" OR "SUPPLY": TO PURCHASE, PROCURE, ACQUIRE AND DELIVER COMPLETE WITH RELATED ACCESSORIES.

4) "WORK": LABOR, MATERIALS, EQUIPMENT, APPARATUS, CONTROLS, ACCESSORIES AND OTHER ITEMS REQUIRED FOR PROPER AND COMPLETE INSTALLATION.

5) "WIRING": RACEWAY, FITTINGS, WIRE, BOXES AND RELATED ITEMS.

6) "CONCEALED": NOT IN VIEW, EMBEDDED IN MASONRY OR OTHER CONSTRUCTION, INSTALLED IN FURRED SPACES, WITHIN DOUBLE PARTITIONS OR HUNG CEILINGS, IN TRENCHES, IN CRAWL SPACES, OR IN ENCLOSURES.

7) "EXPOSED": NOT INSTALLED UNDERGROUND OR "CONCEALED" AS DEFINED ABOVE.

8) "SIMILAR" OR "EQUAL": EQUAL IN MATERIALS, WEIGHT, SIZE, DESIGN AND EFFICIENCY OF SPECIFIED PRODUCT AS DETERMINED BY THE ENGINEER AND ARCHITECT.

C. GENERAL

1) THE DRAWING SHOWS THE APPROXIMATE LOCATIONS OF ALL APPARATUS, THE EXACT LOCATIONS OF WHICH ARE SUBJECT TO THE APPROVAL OF THE OWNER, WHO RESERVES THE RIGHT TO MAKE ANY REASONABLE CHANGES IN THE LOCATION INDICATED WITHOUT EXTRA COST. WHILE THE GENERAL RUN OF CONDUIT AND CABLES ARE INDICATED ON THE DRAWING, IT IS NOT INTENDED THAT THE EXACT ROUTING OR LOCATIONS OF CONDUIT AND CABLES BE DETERMINED THEREFROM.

2) THE ELECTRICAL CONTRACTOR SHALL BE RESPONSIBLE FOR ALL REQUIRED BENDS, OFFSETS, PULL BOXES AND OBSTRUCTIONS. IT SHALL BE THE RESPONSIBILITY OF THE CONTRACTOR TO INSTALL HIS WORK TO CONFORM TO THE STRUCTURE, MAINTAIN HEADROOM AND KEEP OPENINGS AND PASSAGEWAYS CLEAR.

3) THE CONTRACTOR SHALL BE RESPONSIBLE TO COORDINATE WITH ALL TRADES.

4) WIRE ALL FIXTURES, DEVICES, ETC., TO RESPECTIVE PANEL AND CONTROLS AS SHOWN ON PLANS IN SYMBOL FORM.

5) THE CONTRACTOR SHALL BE RESPONSIBLE FOR CLEAN-UP AND REMOVAL FROM THE SITE OF RESULTING DEBRIS UPON COMPLETION OF WORK UNDER THIS SECTION.

D. QUALITY ASSURANCE

1) QUALITY AND GAUGE OF MATERIALS: NEW, BEST OF THEIR RESPECTIVE KINDS, FREE FROM DEFECTS AND LISTED BY UNDERWRITERS LABORATORIES, INC., OR OTHER NATIONALLY APPROVED TESTING AGENCY AND BEARING THEIR LABEL. MATERIALS AND EQUIPMENT OF SIMILAR APPLICATION SHALL BE OF SAME MANUFACTURER, EXCEPT AS NOTED.

2) ALL WORK SHALL BE PERFORMED AND INSTALLED IN A NEAT AND WORKMANLIKE MANNER IN ACCORDANCE WITH THE GUIDELINES OF NECA STANDARD 1-2015 "GOOD WORKMANSHIP IN ELECTRICAL CONSTRUCTION".

3) PROVIDE SKILLED JOURNEYMEN WHO ARE THOROUGHLY TRAINED AND EXPERIENCED IN THE NECESSARY CRAFTS AND WHO ARE COMPLETELY FAMILIAR WITH THE SPECIFIED REQUIREMENTS AND THE METHODS NEEDED FOR PROPER INSTALLATION OF THE WORK OF THIS DIVISION.

4) ON COMPLETION OF THE WORK, THE ENTIRE WIRING SYSTEM SHALL BE ENTIRELY FREE FROM GROUNDS, SHORT CIRCUITS, OPENS, OVERLOADS AND IMPROPER VOLTAGES AND THOROUGH TEST SHALL BE MADE. FURNISH ALL LABOR AND MATERIALS AND INSTRUMENTS.

5) VOLTAGE CHARACTERISTICS

a. DISTRIBUTION: 277/480 VOLT AND 120/208 VOLT, 3 PHASE, 4 WIRE, 60 HERTZ WITH GROUNDED NEUTRAL.

E. PRODUCT DELIVERY, STORAGE AND HANDLING

1) MOVING OF EQUIPMENT: WHERE NECESSARY, SHIP IN CARTED SECTIONS OF SIZE TO PERMIT PASSING THROUGH AVAILABLE SPACES.

2) ACCESSIBILITY: FOR OPERATION, MAINTENANCE AND REPAIR. MINOR DEVIATIONS SHALL BE PERMITTED. CHANGES OF MAGNITUDE OR INVOLVING EXTRA COST ARE NOT PERMISSIBLE WITHOUT REVIEW. GROUP CONCEALED ELECTRICAL EQUIPMENT REQUIRING ACCESS WITH EQUIPMENT FREELY ACCESSIBLE THROUGH ACCESS DOORS.

F. MATERIALS

1) NAMEPLATES: PROVIDE BLACK LAMICOID SHEET WITH 3/4 IN. WHITE LETTERING, FASTENED WITH EPOXY CEMENT FOR EACH DISCONNECT SWITCH, CIRCUIT BREAKER, PANEL, CABINET, TRANSFORMER, ENCLOSURE, MOTOR CONTROLLER AND THE LIKE. NAMEPLATES SHALL DESCRIBE THE NAME AND NUMBER OF EACH COMPONENT.

2) CABLE TAGS: TAG EACH CONDUCTOR PASSING THROUGH SPLICE OR PULLBOX WITH A WHITE LINEN TAG, INDICATING POINT OF ORIGIN AND TERMINATION OF THE CIRCUIT.

3) INSERTS AND SUPPORTS

a. INSERTS: STEEL, SLOTTED TYPE, FACTORY PAINTED.

(1) SINGLE ROD: SIMILAR TO GRINNELL FIG. 281.

(2) MULTI-ROD: SIMILAR TO FEE AND MASON SERIES 9000 WITH END CAPS AND CLOSURE STRIPS.

(3) CLIP FORM NAILS FLUSH WITH INSERTS.

(4) MAXIMUM LOADING 75 PERCENT OF RATING.

b. STRUT: GALVANIZED U-CHANNEL (SIMILAR TO UNISTRUT OR KINDORF)

(1) COLD FORMED FROM LOW-CARBON STEEL WITH HOT-DIPPED GALVANIZED FINISH (ASTM 653 33)

(2) MAXIMUM LOADING 75 PERCENT OF RATING

(3) ASSOCIATED FITTINGS (SPRING NUTS, PIPE STRAPS, ETC.) SHALL BE BY SAME MANUFACTURER AS STRUT.

(4) FILE ALL CUT ENDS SMOOTH AND APPLY COLD GALVANIZING COMPOUND SPRAY (ZRC COLD GALVANIZING COMPOUND SPRAY OR EQUAL)

c. SUPPORTS FROM BUILDING CONSTRUCTION: INSERTS, BEAM CLAMPS, STEEL FISHPLATES (IN CONCRETE FILL ONLY), CANTILEVER BRACKETS OR OTHER MEANS. SUBMIT FOR REVIEW.

d. GROUPED LINES AND SERVICES: TRAPEZE HANGERS OF BOLTED ANGLES OR CHANNELS.

e. WHERE BUILDING CONSTRUCTION IS INADEQUATE: PROVIDE ADDITIONAL FRAMING. SUBMIT FOR REVIEW.

G. PAINT SHALL BE THE BEST GRADE FOR ITS PURPOSE. DELIVER IN ORIGINAL SEALED CONTAINERS AND APPLY IN ACCORDANCE WITH MANUFACTURER'S INSTRUCTIONS. COLORS SHALL BE AS SELECTED BY ARCHITECT OR ENGINEER. UTILIZE GALVANIZED IRON PRIMER ON PANEL AND PULL BOXES, AFTER FABRICATION. UTILIZE HOT DIPPED GALVANIZED OR DIPPED IN ZINC CHROMATE FOR: OUTLET BOXES, JUNCTION BOXES, CONDUIT HANGERS, RODS, INSERTS AND SUPPORTS. RED LEAD OR ZINC CHROMATE WITH FINISH TO MATCH SURROUNDINGS SHALL BE USED FOR MARRED SURFACES OF STEEL EQUIPMENT AND RACEWAYS. A FIELD-APPLIED ZINC CHROMATE PRIME COAT SHALL BE UTILIZED FOR STEEL OR IRONWORK.

H. BRUSH AND CLEAN WORK PRIOR TO CONCEALING, PAINTING AND ACCEPTANCE. PAINTED EXPOSED WORK SOILED OR DAMAGED; CLEAN AND REPAIR TO MATCH ADJOINING WORK BEFORE FINAL ACCEPTANCE. REMOVE DEBRIS FROM INSIDE AND OUTSIDE OF MATERIAL AND EQUIPMENT.

6. DEMOLITION

A. "SELECTIVE DEMOLITION": IS HEREBY DEFINED TO INCLUDE BUT IS NOT NECESSARILY LIMITED TO THE REMOVAL OF THE FOLLOWING EXISTING MATERIALS, ITEMS AND EQUIPMENT.

1) REFER TO ELECTRICAL DEMOLITION PLAN AND RELATED NOTES FOR EXTENT OF DEMOLITION.

2) REFER TO EXISTING DRAWINGS AND SITE CONDITIONS FOR ALL REMOVAL OF WORK NECESSARY FOR COMPLETION OF NEW WORK AS SHOWN. EACH BIDDER SHALL CAREFULLY EXAMINE THE PREMISES AND DOCUMENTS DURING THE BIDDING PERIOD AND ASCERTAIN THE EXTENT OF REMOVAL OF EXISTING WORK. IF THE CONTRACTOR NOTES ADDITIONAL WORK, CALL IT TO THE ATTENTION OF THE ARCHITECT PRIOR TO SUBMITTING BID. BY SUBMITTING A BID, THE CONTRACTOR WILL HAVE DEEMED TO PROVIDE SUCH EXAMINATION, TO HAVE ACCEPTED SUCH CONDITIONS, AND TO HAVE MADE ALLOWANCES IN PREPARING HIS BID.

7. CUTTING AND PATCHING

A. THE CONTRACTOR SHALL BE RESPONSIBLE FOR ALL CUTTING AND PATCHING OF THE EXISTING AND NEW CONSTRUCTION WORK, WHICH MAY BE REQUIRED FOR THE PROPER INSTALLATION OF THE ELECTRICAL WORK. ALL PATCHING SHALL BE OF THE SAME MATERIALS, WORKMANSHIP, AND FINISH, AND SHALL ACCURATELY MATCH ALL SURROUNDING WORK.

B. CORE BORING OF CONCRETE FLOORS AND/OR WALLS IF REQUIRED, IS THE RESPONSIBILITY OF THE ELECTRICAL CONTRACTOR.

8. COORDINATION

A. THE CONTRACTOR SHALL VERIFY LOCATIONS OF ALL EQUIPMENT WITH ARCHITECTURAL DRAWINGS. IN CENTERING OUTLETS AND LOCATING BOXES AND OUTLETS, ALLOW FOR OVERHEAD PIPES, DUCTS, AND MECHANICAL EQUIPMENT, VARIATIONS IN FIRE PROOFING AND PLASTERING, WINDOW AND DOOR TRIM, PANELING, HUNG CEILINGS, AND THE LIKE, AND CORRECT ANY INACCURACY RESULTING FROM FAILURE TO DO SO WITHOUT EXPENSES TO THE OWNER

9. EQUIPMENT FURNISHED BY OTHERS

A. WHERE INDICATED, THE CONTRACTOR SHALL FURNISH AND INSTALL WIRING FOR EQUIPMENT FURNISHED BY OTHERS, AS SHOWN ON DRAWINGS. COORDINATE WITH ALL OTHER TRADES OR DETAILS FOR INSTALLATION. THE TERM "WIRING" AS USED HERE-IN, INCLUDES, BUT IS NOT LIMITED TO, FURNISHING AND INSTALLING CONDUIT, WIRE, JUNCTION BOXES, DISCONNECTS AND MAKING CONNECTIONS. CONTRACTOR SHALL CHECK ARCHITECTURAL, MECHANICAL, AND PLUMBING DRAWINGS AND SPECIFICATIONS FOR EQUIPMENT TO BE INSTALLED BY OTHERS. CONTRACTOR SHALL BE RESPONSIBLE FOR PROPER WIRING AND NECESSARY ELECTRICAL ADJUSTMENTS TO EQUIPMENT TO CONFORM TO SPECIFIED REQUIREMENTS OF THE EQUIPMENT.

10. LOW-VOLTAGE DISTRIBUTION EQUIPMENT

A. PROVIDE COMPLETE EQUIPMENT INCLUDING: SWITCHES AND CIRCUIT BREAKERS.

B. ALL EQUIPMENT SHALL CONFORM TO NEMA, ANSI AND IEEE STANDARDS.

C. DISCONNECT SWITCHES SHALL BE FUSED OR NON-FUSED AS NOTED. VOLTAGE SHALL BE AS REQUIRED. SWITCHES SHALL BE HEAVY DUTY, EXCEPT AS NOTED, AND HORSEPOWER RATED FOR MOTOR LOADS.

1) TOGGLE TYPE SWITCHES SHALL BE NON-FUSED, LOAD BREAK, HAVING MAXIMUM RATINGS OF 30 AMP AT 600 VOLTS IN AN ALUMINUM NEMA 1 ENCLOSURE UON. TWO-POLE SWITCHES SHALL BE SIMILAR TO HUBBELL #HBL1372D. THREE-POLE SWITCHES SHALL BE SIMILAR TO HUBBELL #HBL1379D.

2) CIRCUIT BREAKERS INSTALLED IN EXISTING PANEL BOARDS, SHALL BE OF THE SAME MANUFACTURER, TYPE AND A.I.C. RATING AS PRESENTLY IN USE.

D. FOR ALL GROUND-MOUNTED TRANSFORMERS, SWITCHBOARDS AND SWITCHGEAR, PROVIDE 4" HIGH CONCRETE PAD WHICH EXTENDS MINIMUM 4" PAST ALL SIDES OF EQUIPMENT FOOTPRINT, 3,000 LB CONCRETE MINIMUM

E. BALANCE THE LOAD OVER PHASES WHEN NEW CIRCUITS ARE ADDED TO NEW OR EXISTING PANELS, SWITCHBOARDS AND/OR SWITCHGEAR. PROVIDE MULTI-CABLE LUGS WHERE REQUIRED. DOUBLE LUGGING SHALL NOT BE PERMITTED. MOUNTING HEIGHT SHALL BE A MAXIMUM OF 6 FT.-6 IN. FROM FLOOR TO TOP SWITCH UNIT. UPDATE DIRECTORIES ON EXISTING PANELBOARDS WHERE CIRCUITING IS CHANGED.

F. TESTS: OPEN AND CLOSE LOAD BREAK SWITCHING DEVICES UNDER LOAD.

11. GROUNDING

a. AN EQUIPMENT-GROUNDING CONDUCTOR, COMMONLY DESCRIBED AS A "GREEN WIRE" SHALL BE PROVIDED FOR ALL BRANCH CIRCUITS PROTECTED BY OVERCURRENT DEVICES. "GREEN GROUND" WIRE SHALL ALSO BE PROVIDED FOR FLEXIBLE CONDUIT AND MOTOR CIRCUITS.

12. RACEWAYS

A. PROVIDE RACEWAYS COMPLETE WITH BOXES, FITTINGS AND ACCESSORIES. CONDUIT OR TUBING SIZES REFERRED TO IN SPECIFICATIONS AND ON DRAWINGS ARE NOMINAL DIAMETERS. MINIMUM DIAMETER SHALL BE 3/4 IN.

B. MATERIALS

1) RACEWAYS

a. RIGID STEEL CONDUIT: FULL-WEIGHT PIPE, GALVANIZED, THREADED.

b. ELECTROMETALLIC TUBING (EMT): THIN WALL PIPE, GALVANIZED, THREADLESS.

c. FLEXIBLE STEEL CONDUIT: CONTINUOUS SINGLE STRIP, GALVANIZED.

d. LIQUIDTIGHT FLEXIBLE METALLIC CONDUIT: GALVANIZED LOW CARBON STEEL CORE WITH UL BONDED STRIP, WITH A FLAME RETARDANT, SUNLIGHT RESISTANT PVC JACKET. UL LISTED AS LIQUIDTIGHT. LFNC IS NOT ACCEPTABLE.

e. WIREWAYS: DIMENSIONS AS NOTED, MINIMUM NO. 16 GAUGE STEEL WITH GROUND CONTINUITY. FINISH SHALL BE BAKED ENAMEL. COVERS SHALL BE SCREW-ON.

2) FITTINGS AND ACCESSORIES

a. RIGID STEEL: NONSPLIT, THREADED, STEEL OR MALLEABLE IRON. ZINC-PLATED STEEL ONLY - ZINC DIE CAST NOT PERMITTED.

b. ELECTROMETALLIC TUBING: COMPRESSION TYPE 2 IN. AND UNDER. SET SCREW OR COMPRESSION TYPE 2-1/2 IN. AND LARGER. GALVANIZED RIGID STEEL ELBOWS, 2 IN. OR LARGER. ZINC-PLATED STEEL ONLY - ZINC DIE CAST NOT PERMITTED. EXTERIOR EMT FITTINGS SHALL BE RAIN-TIGHT TYPE.

c. FLEXIBLE METALLIC CONDUIT: SQUEEZE TYPE COMPRESSION FITTING WITH INSULATED THROAT. ZINC-PLATED STEEL ONLY - ZINC DIE CAST NOT PERMITTED.

d. LIQUIDTIGHT FLEXIBLE METALLIC CONDUIT: THREADED GASKETED MALLEABLE IRON, STEEL OR ALUMINUM WITH INSULATED THROAT, UL LISTED FOR WET LOCATIONS.

e. BUSHINGS: METALLIC INSULATED OR PLASTIC TYPE.

f. CONDUIT STRAPS SHALL BE 2-HOLE TYPE.

3) BOXES

a. OUTLET BOXES: EXCEPT AS OTHERWISE REQUIRED BY CONSTRUCTION, DEVICES OR WIRING, BOXES SHALL BE STAMPED STEEL, 4 IN. SQUARE OR OCTAGON FOR FIXTURES. BOXES ABOVE CEILING SHALL BE 1-1/2 IN. DEEP. BOXES IN CEILING OR SLAB SHALL BE 3 IN. DEEP. BOXES IN WALL FOR FIXTURES SHALL BE 2-3/4 IN. DEEP. BOXES IN WALL FOR RECEPTACLES AND SWITCHES SHALL BE 1-1/2 IN. DEEP. FURNISH WITH RAISED COVERS AND FIXTURE STUDS WHERE REQUIRED.

b. JUNCTION AND PULL BOXES: GALVANIZED SHEET STEEL WITH SCREW-ON COVERS, EXCEPT AS NOTED. FURNISH WITH INSULATED SUPPORTS FOR CABLES. LOCATIONS SHALL BE AS NOTED OR REQUIRED AND ACCESSIBLE.

c. JUNCTION AND PULL BOXES SHALL BE LOCATED CLEAR OF OTHER TRADES. CONCEAL JUNCTION AND PULL BOXES IN FINISHED SPACES. WHERE NECESSARY, REROUTE RACEWAYS OR MAKE OTHER ARRANGEMENTS FOR CONCEALMENT. BOXES SHALL BE ACCESSIBLE. SUPPORT BOXES FROM BUILDING STRUCTURE, INDEPENDENT OF CONDUIT.

C. PROVIDE RACEWAYS ONLY AS HEREIN SPECIFIED, EXCEPT AS NOTED. RACEWAYS SHALL BE RUN CONCEALED, EXCEPT AS NOTED.

1) PROVIDE RACEWAY SUPPORT UTILIZING CEILING TRAPEZE, STRAPHANGERS, OR WALL BRACKETS.

2) SECURE ALL RACEWAYS TO SUPPORTS WITH PIPE STRAPS OR U-BOLTS. SPACING OF SUPPORTS SHALL BE A MINIMUM OF 10 FT. ON CENTER FOR METALLIC RACEWAY AND AS REQUIRED FOR NONMETALLIC RACEWAY. SPACING SHALL BE 5 FT. ON CENTER FOR WIREWAYS AND PER CODE AND AS NOTED FOR OTHERS. MOUNT SUPPORTS TO STRUCTURE MASONRY WITH TOGGLE BOLTS ON HOLLOW MASONRY, EXPANSION SHIELDS OR INSERTS IN CONCRETE AND BRICK, MACHINE SCREWS ON METAL, BEAM CLAMPS ON FRAMEWORK, WOOD SCREWS ON WOOD, AND PAN THROUGH STRAPS IN METAL DECK. NAILS, RAW PLUGS OR WOOD PLUGS SHALL NOT BE PERMITTED. WHERE REQUIRED BY STRUCTURE, FURNISH THROUGH BOLTS AND FISHPLATES.

3) RACEWAYS SHALL BE RUN PARALLEL WITH OR AT RIGHT ANGLES TO BUILDING AND STRUCTURAL LINES. PROVIDE CLEARANCE WITH WATER, STEAM OR OTHER PIPING (MINIMUM 3 IN. SEPARATION FROM STEAM AND HOT WATER PIPES, EXCEPT 1 IN. FROM PIPE COVER AT CROSSINGS AND 18 IN. FOR PARALLEL RUNS). FOR HUNG CEILING OUTLETS, RUN IN HUNG

CABLE, WITH MARKING INDICATING SIZE AND TYPE. COPPER LUG CONNECTIONS TO BUS BARS: USE ANTI-SEIZE COMPOUND ON TANG.

G. LEAVE WIRES WITH SUFFICIENT SLACK TO PERMIT MAKING FINAL CONNECTIONS.

H. PERFORM CONTINUITY AND INSULATION TESTS. MEGGER TEST 100 PERCENT OF FEEDERS, 10 PERCENT OF BRANCH CIRCUITS AND ALL MOTOR BRANCH CIRCUITS OVER 25 HP.

I. PERFORM TESTS PRIOR TO CONNECTING EQUIPMENT AND IN PRESENCE OF AUTHORIZED REPRESENTATIVES. SUBMIT WRITTEN REPORT OF RESULTS. CORRECT OR REPLACE CABLE TESTING BELOW MANUFACTURER'S STANDARDS.

14. POWER WIRING

A. PROVIDE ALL POWER WIRING TO ALL MOTORS AND EQUIPMENT FURNISHED UNDER ALL CONTRACTS ON THE PROJECT. INCLUDE EXTENSIONS FROM CONTROLLERS TO MOTORS AND MOTOR CONNECTIONS. MOUNT AND WIRE ALL CONTACTORS AND POWER DEVICES FURNISHED UNDER ALL CONTRACTS.

15. DEVICES

A. LOCAL SWITCHES

B. MANUAL MOTOR STARTERS

1) FLUSH OR SURFACE MOUNTED TYPE WITH INTEGRAL THERMAL OVERLOAD PROTECTION AND PILOT LIGHT. SIMILAR TO SQUARE D CLASS 2510 AND 2512 TYPE F.

C. MOTOR-RATED SWITCHES

1) FLUSH OR SURFACE MOUNTED TYPE WITH PILOT LIGHT. SIMILAR TO SQUARE D CLASS 2510, 2511 AND 2512 TYPE F.

D. DEVICE WIRING

1) ALL DEVICES SHALL BE SIDE-WIRED VIA SCREW TERMINALS – PUSH-IN WIRING (AKA "QUICKWIRE") THROUGH THE BACK OF THE DEVICE IS NOT AN ACCEPTABLE WIRING METHOD.

16. FIRE STOPPING

A. DRAWINGS AND GENERAL PROVISIONS OF CONTRACT, INCLUDING GENERAL AND SUPPLEMENTARY CONDITIONS AND DIVISION SPECIFICATION SECTIONS, APPLY TO WORK OF THIS SECTION.

B. PROVIDE ALL REQUIRED FIRE STOPPING. WORK INCLUDES FIRE-STOPPING PENETRATIONS OF FIRE-RESISTANCE RATED FLOORS, WALLS AND PARTITIONS IN NEW CONSTRUCTION, AS WELL AS PRE-EXISTING PENETRATIONS IN RENOVATION AREAS OF EXISTING CONSTRUCTION.

C. PRODUCT DATA: SUBMIT MANUFACTURER'S PRODUCT DATA FOR EACH FIRE-STOPPING PRODUCE REQUIRED, INCLUDING INSTRUCTIONS FOR SUBSTRATE PREPARATION AND FIRE-STOPPING INSTALLATION.

D. FIRE RESISTANT JOINT SEALERS: PROVIDE MANUFACTURER'S STANDARD FIRE-STOPPING SEALANT WITH ACCESSORY MATERIALS, HAVING FIRE RESISTANCE RATINGS INDICATED AS ESTABLISHED BY TESTING IDENTICAL ASSEMBLIES PER ASTM E814 BY UNDERWRITERS LABORATORY, INC. OR OTHER TESTING AND INSPECTING AGENCY ACCEPTABLE TO AUTHORITIES HAVING JURISDICTION.

E. MATERIALS – PROVIDE THE FOLLOWING:

1) ONE-PART FIRE-STOPPING SEALANT: ONE PART LATEX BASED INTUMESCENT SEALANT FORMULATED FOR USE IN A THROUGH-PENETRATION FIRE-STOP SYSTEM FOR SEALING OPENINGS AROUND CABLES, CONDUIT, PIPES AND SIMILAR PENETRATIONS THROUGH WALLS AND FLOORS. ACCEPTABLE PRODUCTS/MANUFACTURERS INCLUDE THE FOLLOWING:

a. SPEC SEAL LC SERIES

b. HILTI FS-ONE MAX

c. 3M FD150+

17. TESTS

A. BEFORE MAKING TESTS, COMPLETE ALL CONNECTIONS AT PANELS AND OTHER EQUIPMENT. INSTALL FUSES AND HAVE ALL WIRING CONTINUOUS FROM SERVICE EQUIPMENT TO UTILIZATION OUTLETS. CORRECT ALL UNDESIRABLE GROUND, OPEN AND SHORT CIRCUIT CONDITIONS.

B. TAKE AND RECORD THE FOLLOWING READINGS ON SYSTEMS 600 VOLTS AND BELOW:

1) MEGGER TESTS OF ALL FEEDER CIRCUIT CONDUCTORS, GROUND CONDUCTORS, AND CONDUIT GROUND.

2) AMMETER READINGS ON ALL PHASES AND NEUTRAL OF EACH FEEDER TO INDICATE BALANCE.

3) AMMETER READINGS ON ALL PHASES OF EACH POLYPHASE MOTOR. INCLUDE NAMEPLATE FULL LOAD CURRENT OF EACH MOTOR ON DATA SHEET.

4) CERTIFY THAT ALL OVERLOAD DEVICES HAVE BEEN SET IN ACCORDANCE WITH DATA SHOWN ON THE DRAWINGS AND/OR MANUFACTURER'S RECOMMENDED SETTING.

C. SEND FINAL CERTIFIED TEST REPORTS AND CERTIFICATIONS TO THE OWNER FOR APPROVAL.

18. DEMONSTRATION OF COMPLETE ELECTRICAL SYSTEMS

A. SUBMIT WRITTEN CERTIFICATION THAT ELECTRICAL SYSTEMS ARE COMPLETE AND OPERATIONAL. SUBMIT CERTIFICATION WITH CONTRACTOR'S REQUEST FOR FINAL REVIEW.

1) AT THE TIME OF FINAL REVIEW OF ELECTRICAL WORK, DEMONSTRATE THE OPERATION OF ELECTRICAL SYSTEMS. FURNISH LABOR, APPARATUS AND EQUIPMENT FOR SYSTEMS' DEMONSTRATION. THE VARIOUS TEST SHALL BE WITNESSED BY AND THE OWNER OR HIS REPRESENTATIVE.

B. THE CONTRACTOR SHALL FURNISH ALL TEST EQUIPMENT, MATERIALS, LABOR, AND TEMPORARY POWER HOOK-UPS TO PERFORM START-UP AND ALL TESTS AS REQUIRED TO OBTAIN FINAL FIELD ACCEPTANCE FROM OWNER. ALL TESTS SHALL BE CONDUCTED IN THE PRESENCE OF THE OWNER OR HIS REPRESENTATIVE. ALL TEST PROCEDURES SHALL CONFORM TO THIS SPECIFICATION AND APPLICABLE STANDARDS THE ANSI, IEEE, NEMA, OSHA, NEPA, ETC.

C. THE CONTRACTOR SHALL BE RESPONSIBLE FOR ALL TESTS AND TEST RECORD. TESTING SHALL BE PERFORMED BY AND UNDER THE IMMEDIATE SUPERVISION OF THE CONTRACTOR. TEST RECORD SHALL BE KEPT FOR EACH PIECE OF EQUIPMENT. COPIES SHALL BE FURNISHED TO THE ENGINEER FOR REVIEW AND/OR APPROVAL.

D. A VISUAL INSPECTION OF ALL ELECTRICAL EQUIPMENT, TO CHECK FOR THE FOREIGN MATERIAL, TIGHTNESS OR WIRING AND CONNECTION, PROPER GROUNDING, MATCHING NAMEPLATE CHARTS WITH SPECIFICATION, ETC., SHALL BE MADE PRIOR TO ACTUAL TESTING.

19. SPECIAL ENGINEERING SERVICES

A. IN THE INSTANCE OF COMPLEX OR SPECIALIZED ELECTRICAL SYSTEMS SUCH AS EMERGENCY SYSTEM FIRE ALARM OR SIMILAR MISCELLANEOUS SYSTEMS, THE INSTALLATION, FINAL CONNECTIONS AND TESTING OF SUCH SYSTEMS SHALL BE MADE UNDER THE DIRECT SUPERVISION OF COMPETENT AUTHORIZED SERVICE ENGINEERS WHO SHALL BE IN THE EMPLOY OF THE RESPECTIVE EQUIPMENT MANUFACTURER.

B. ANY AND ALL EXPENSES INCURRED BY THESE EQUIPMENT MANUFACTURERS' REPRESENTATIVES RELATED TO THIS PROJECT, SHALL BE BORNE BY THE ELECTRICAL CONTRACTOR.

20. DESIGN MODIFICATIONS

A. THE DRAWINGS SHOW ELECTRICAL SYSTEMS, WHICH SUPPLY, CONTROL, AND/OR MONITOR SYSTEMS SPECIFIED ELSEWHERE. THE ELECTRICAL SYSTEM SHOWN HAS BEEN BASED ON SPECIFIC MANUFACTURERS DATA OR INFORMATION CONVEYED TO THE ELECTRICAL DESIGNER. WHERE ANY AGREEMENT OR CHANGE IS MADE TO SUPPLY EQUIPMENT OF LARGER CAPACITY OR DIFFERENT ELECTRICAL CHARACTERISTICS, THE CONTRACTOR SHALL BE RESPONSIBLE FOR PROVIDING THE ELECTRICAL SYSTEM TO EFFECT SUCH CHANGES WITHIN THE INTENT OF THESE SPECIFICATIONS AND TO INFORM THE ENGINEER, IN WRITING, OF SUCH CHANGE. FOR EXAMPLE, IF HVAC COMPRESSORS AND/OR MOTORS ARE ALLOWED TO BE CHANGED TO 230 VOLTS RATHER THAN THE ORIGINALLY SPECIFIED 208 VOLTS, BOOSTING OR BUCKING TRANSFORMERS SHALL BE SUPPLIED, INSTALLED, AND WIRED TO ACCOMMODATE THE CHANGE AT NO ADDITIONAL COST.

Bowman

457 OAKSHADE ROAD
SHAMONG, NJ 08088
(609)-268-0500
WWW.BOWMAN.COM

PROJECT
THE COLLEGE OF NEW JERSEY - EICKHOFF HALL
2000 PENNINGTON ROAD
EWING, NJ 08628

TITLE
ELECTRICAL SPECIFICATIONS

CONTRACTOR SHALL CHECK & VERIFY ALL DIMENSIONS AND FIELD CONDITIONS PRIOR TO STARTING CONSTRUCTION.

REV:	DESC:	DATE:

DRAWN BY:	KHP
CHECKED BY:	JAM
DATE:	03/28/2025
SCALE:	AS NOTED

JOB NO. 25033

E2.01