THE COLLEGE OF NEW JERSEY
FIRE ALARM CABLE INFRASTRUCTURE UPGRADES

2000 PENNINGTON ROAD
EWING, NJ 08618

SITE LOCATION

AERIAL IMAGE

This Drawing Is The Property Of DLB Associates Consulting Engineers, PC. It Was Prepared Exclusively For This Particular Project And Is Limited To This Project Only. Unauthorized Reproduction Or Other Use Of These Drawings Or Ideas Is Prohibited.

30x42

ITEM	DATE	ISSUE DESCRIPTION	ITEM	DATE	ISSUE DESCRIPTION
1	09/18/19	ISSUED FOR BID			

dlb associates
CONSULTING ENGINEERS, P.C.
265 Industrial Way West, Eatontown, N.J. 07724
Questions For DLB Call: Anthony Laskosky
DLB Project ID: 47211 Phone: 732-927-5038

project: TCNJ - CAMPUS FIRE ALARM CABLE INFRASTRUCTURE UPGRADES 2000 PENNINGTON ROAD, EWING NJ, 08618

title: COVER SHEET

scale	drawn by	checked by	date
AS SHOWN	SC	SG	09/18/2019

dwg. no. G000

Confidential and Proprietary / ©DLB Associates 2019

PROJECT OVERVIEW

1. Project Description:
   - A. This Project Will Upgrade All Campus Fire Alarm Cable Infrastructures From Copper To Fiber Which Includes Fiber Optic Cabling Between Buildings For Fire Alarm Building System Upgrades That Will Be Completed Under A Separate Project.
   - B. The Project Consists Of Installation Of New Fiber Communication Infrastructure To Provide Fiber Connectivity At Each Building Fire Alarm Panel. The Quantity Of New Fibers Installed Will Create Communication Paths And Connect All Building FACP's To Front End.
2. Scope Of Work Summary:

   The Following Is A Brief Scope Of The Work For This Project (Not Intended To Be All Inclusive):

   - A. Conduit Installations:
     1) Install Underground Conduit Duct Banks In All Locations Where Existing Spare Conduits Are Not Available Between Buildings For Fiber Cable Routing. This Will Require A Minimum Of 2-4" PVC Conduits Run In Concrete Duct Banks.
     2) Install New Pathways Inside The Buildings In Electrical / Mechanical Rooms And Other Areas As Identified On Drawings For Routing The New Fiber.
   - B. Fiber Cable Installations:
     1) Install New Fiber Communication Infrastructure Between Buildings. Fiber Shall Be Routed Continuous (Unspliced) From MDF Room In One Building To MDF Room In Another Building. This Includes Routing Fiber In Underground Duct Banks And From Point Of Entry (POE) In The Buildings To MDF Room. These Pathways May Be A Combination Of New Conduits And Existing Spare Conduits.
     2) Install Fiber From MDF Room To WCH Which Is To Be Located In The Vicinity Of The Fire Alarm Control Panel In Each Building. Terminate All Fibers At All Locations.
     3) Where Indicated Pull Out Existing Communication Fiber Cable Between Building And Install New Larger Fiber Cables That Would Include Fibers For Both New Fire Alarm Communication And The Replacement Fibers For Existing IT Requirements. Terminate all Fibers. Disconnection Of Jumpers On Existing Fibers Will Be By TCNJ IT Department.

DESIGN CRITERIA AND ADDITIONAL PROJECT REQUIREMENTS

1. General:
   - A. Entire Installation Shall Comply With All Local And State Codes And Other Authorities Having Jurisdiction. Contractor Shall Secure, Pay And Schedule All Required Permits, Fees, And Inspections Required For Their Work.
2. Applicable Codes And References:
   - A. International Building Code, 2015 Edition.
   - B. National Electrical Code, 2014 Edition.
   - C. UL 96A - Installation Requirements For Lightning Protection Systems, Current Edition.

   All Local & State Amendments Shall Be Included In The Project Requirements.
3. Fiber
   - A. The Campus Standard For Fiber Shall Be Hybrid (Single Sheath), 12-Strand 9/125-Micrometer Single-Mode / 12-Strand 62.5/125-Micrometer, Multimode, Optical Ribbon Fiber Cable, Unless Otherwise Noted .
   - B. Provide Traceable Mule Tape In Communications Conduits In Parallel With Each Fiber Cable. Terminate Each Tracer On An IDC Grounding Terminal Designed For The Purpose And Connected To A Communications Grounding Point.
   - C. Labeling Of Each Cable And Each Termination Will Be Required. This Includes The Labeling Scheme As Well As The Materials And Methods.
   - D. Fiber Installation And Testing To Follow EIA/TIA and BICSI Standards.
   - E. Basis Of Design Shall Be Corning For Fiber And Associated Hardware.

SPECIAL EMPHASIS & CONCERNS

1. Coordinate This Project's Scope Of Work With Other Projects Being Undertaken By Others For TCNJ Including:
   - A. The Installation Of Fire Alarm Panels
   - B. The Installation Of Other Campus Utility Projects Such As; Domestic Water Piping, Fire Suppression Piping, And Feeder 'A' Replacement.
2. The Contractor Shall Restore Disturbed Areas To Match Existing, Adjacent Surfaces (Grass, Pavement, Concrete, Gravel, Etc.) As Per TCNJ Requirements. For Grass Areas This Includes Topsoil, Seed and Hay.
3. Include All Fence Removal, Replacement, To Perform The Work On this Project.
4. Coordinate All Fiber Termination Locations With TCNJ IT Department.
5. Coordinate Routing Of Underground Conduits With Existing Underground Utilities, Infrastructure, Trees, Etc...
6. Coordinate And Schedule Work To Limit Impacting Emergency Exit Routes During Times The Building Is Used Most Frequently, Such As During The Semesters.
7. All Work Shall Be Conducted In A Manner Compliant With Local, State, And Federal Regulations And Codes. This Includes, But Is Not Limited To, The Use Of Proper Cave-in Protection Methods And Entry Into Permit Required Confined Spaces, Such As Manholes.
8. The Contractor Shall Limit And Contain Materials, Equipment, Debris, Odors, Etc. Within The Work Areas.
9. The Contractor Shall Identify The Entrances To Work Areas, And Install Signs Indicating That Only Authorized Personnel May Enter And The Requirements (i.e. PPE, Etc.) To Enter.
10. During Any Full Or Partial Lane Closures, For Any Duration, The Contractor Or Its Subcontractor(s) Shall Provide Proper Traffic Control Measures.
11. Location And Marking Of Site Utilities Is The Responsibility Of The Contractor. Location Markings To Be Reviewed With College Personnel And Markout Technician.
12. A Portion Of This Work Will Be Occurring In The Path Of An Emergency Egress Route. During All Phases Of This Project, A Protected Emergency Egress Route Must Be Maintained Through Each Affected Emergency Egress Route, Allowing Retreat From The Building. Approval From The Department Of Community Affairs Is Required To Close Or Re-Direct An Egress Route
13. Contractor Shall Prepare And Submit Confined Space Entry Program As Part Of The Submittal Process.
14. Duct Banks And Conduits Shall Be Installed Above Water And Steam Lines. Maintain A 6 Foot Clearance With Any Parallel Steam Lines. Underground Crossings Above Steam Lines Shall Maintain A Minimum Of 24 Inch Clearance To Be Filled With Foam Glass Insulation. Contractor Shall Provide Shop Drawings For Areas Where New Duct Bank Will Cross Underneath Existing underground Utilities Including Details Along With Appropriate Shoring And Support Details.
15. Contractor Shall Visit The Site Prior To Bidding And Notify TCNJ/DLB Of Discrepancies In An RFI During The Questions Period Of The Bid Milestone Schedule.

CONTRACTOR UNIT PRICING REQUIREMENTS

Contractor To Provide Unit Pricing For:

1. Linear Foot Of Trenching, Conduit, And Fiber Installed As Shown For Cable Size Identified On FA002 Installed In A Grassy Area As Per Detail 02/03 On Sheet G003.
2. Linear Foot Of Fiber As Shown For Cable Size Identified On FA003 Pulled Through An Existing Spare Conduit Within Innderduct.

ADD ALTERNATES

1. Add Alternate #1 - Fiber Cable Strand Count Change. Cable Strand Counts Reflected In The Drawing Set Indicates Base Bid Size And Alternate Is Reflected In Table On G004. Alternate Shall Include Changed Cable Size And All Necessary Connector Housings, Cassettes, Connectors, Terminations, Testing, Etc.
2. Add Alternate #2 - Underground Duct Bank Conduit Quantity Change. Refer To Table On Drawings FA005, FA006, FA007, And FA008 For Duct Banks Included In This Change.
3. Add Alternate #3 - New Underground 4" Conduit Will Be Routed To Provide Link Between Travers To The TW Garage. Existing Underground Conduit Would Be Scoped As Part Of The Base Bid To Determine If Conduit Has Been Compromised.
4. Add Alternate #4 - New Underground 4" Conduit Will Be Routed To Provide Link Between The Plant And The Maintenance Building. Routing Would Follow The Existing Path From The Chiller Room To The Pull Box On The Exterior Of Maintenance. The Existing Underground Conduit Would Be Scoped As Part Of The Base Bid To Determine If Conduit Has Been Compromised.

PROJECT OBJECTIVES AND EXECUTION

1. Objectives:
   - A. The Intent To Keep The Campus And All Buildings Connected To The Existing Campus Infrastructure As Long As Practical During The Construction. As A Result Timing And Phasing Of The Construction Will Be High Priority During Construction Planning And Contractor Selection.
   - B. The Project Must Be Completed On Time.
   - C. The Work Must Be Scheduled & Adjusted As Needed To Accommodate The Operation Of The College Of New Jersey.
   - D. Complete The Project As Fast As Possible While Maintaining Quality And Minimizing Disruption.
2. Project Execution:
   - A. The Project Shall Be Bid To A Single Prime Contractor. The Contractor Shall Include All Sub Contractors Under Them Necessary To Complete The Various Scope Items Included In These Documents.
   - B. Any Period Of Downtime For Building Communications Systems Shall Be Coordinated To Avoid Disruption And To Be For Minimum Disruption.

GENERAL NOTES

1. General:
   - A. All General Notes Are To Be Read And Adhered To By Each Contractor. The Notes Are Loosely Categorized By Trade, But This Does Not Limit The Responsibility Of The Contractor To Any Single Category.
   - B. Entire Installation Shall Comply With All Local And State Codes And Other Authorities Having Jurisdiction.
   - C. Proper Fire Protection Measures, Satisfactory To The Local Fire Department, Shall Be Taken When Welding Or Cutting With Torches Or Electric Arc. Contractor To Provide Open Flame Permit If Required.
   - D. All Exposed Cables Of Any Type In Plenum Ceiling Space Or Open Ceiling Space Shall Be Installed In Conduit.
   - E. All Contractors Are To Maintain One Set Of Red Line As-Builts On Site During Construction Period For Review By The Owner / Engineer.
   - F. All Open Ended Conduits Are To Be Protected During The Construction Period From Construction Dust And Debris.
2. Coordination:
   - A. Contractor Shall Coordinate Their Work With The Existing Field Conditions, And Other Active Projects In Construction Or Development That Could Directly Impact, Or Be Impacted By, The Scope Of This Project.
   - B. Contractor Shall Visit The Job Site And Verify Existing Field Conditions Prior To Submission Of Bid.
   - C. Contractor Shall Secure And Pay For All Required Permits And Shall Arrange All Required Inspections.
3. Installation / Demolition:
   - A. Proper Fire Protection Measures, Satisfactory To The Local Fire Department, Shall Be Taken When Welding Or Cutting With Torches Or Electric Arc.
   - B. Each Contractor Shall Be Responsible For All Cutting And Patching Of Walls And Floors Required As A Result Of Their Work.
   - C. All Penetrations Of Floors (Whether Or Not Fire Resistance Rated) And All Penetrations Of Fire Rated Walls Shall Be Firestopped. Refer To The Specification For Additional Requirements.
   - D. Conduit, Ductbank, And Wiring Layouts Are Schematic Diagrams And Are Intended To Show General Arrangement, Size And Capacity, And Do Not Indicate Which Conduit Is Above Or Below The Other. All Offsets Are Not Necessarily Shown. Contractor Shall Arrange And Coordinate The Work, Furnish Necessary Offsets And Fittings To Avoid Conflict With Other Mechanical And Electrical Services, Structural And Architectural Elements, And Underground Utilities And Infrastructure, Without Additional Cost To The Owner. If Areas Of Conflict Are Encountered, The Engineer Shall Be Notified And Contractor Recommendations Shall Be Submitted To The Engineer For Approval Before Work Has Begun.
   - E. All Cost Associated With Rigging, Receiving And Storage Shall Be The Responsibility Of The Contractor.
   - F. Contractor Shall Provide All Necessary Miscellaneous Steel For The Support Of All Equipment And Conduit That Is Suspended From Slab, Steel, Wall, Trusswork, Etc., Or Anchored To Pads, Foundations, Frames, Etc.

ELECTRICAL NOTES

1. Communication Cabling
   - A. In General, Cabling Is Not Shown On The Plan Drawings. Symbols For FACP, MDF, POE, Etc. Are Shown To Identify Approximate Locations Of Existing Equipment Or Spaces. Cabling Shall Be Provided Between All Locations Shown On These Drawings And In Accordance With These General Notes And Specifications.
   - B. Fiber Shall Be Hybrid (Single Sheath), 12-Strand 9/125-Micrometer Single-Mode / 12-Strand 62.5/125-Micrometer, Multimode, Optical Ribbon Fiber Cable, Unless Otherwise Noted .
2. Wiring Methods
   - A. General
     1) In Finished Areas, Conceal All Cable Pathways In Building Walls, Floors, And Above Finished Ceilings. Cable Pathways May Be Run Exposed In Mechanical/Electrical Equipment Rooms, Electrical Closets, Utility Rooms And As Approved By The Owner. No Cable Pathways Shall Be Installed Exposed On The Outside Surfaces Of The Building(s) Unless Previously Approved.
     2) Indoors (Unclassified) — EMT Conduit With Steel Set Screw Fittings - Exposed Locations; Flexible Non Metallic Tubing - Concealed / Above Ceilings.
     3) Outdoors (Unclassified)
        - a. Exposed: EMT Conduit With Rain Tight Steel Fittings
        - b. Underground: Schedule 40 PVC Conduit For Straight Runs, Installed In Concrete Encased Ductbank

FIBER NOTES

1. Contractor To Cooridate With TCNJ IT Department For All Fiber Material, Labeling, Installation And Other Requirements. Contractor To Meet With TCNJ IT Representative To Coordinate All Connections Including Those Located At POE, MDF And In Existing IT Manholes.
2. All Cables To Be Tested Upon Receipt At Project Site To Determine Continuity Of Each Strand End To End With Optical Loss and OTDR Test Sets (Tier 1 And Tier 2 Testing). Compare To Manufacturer's Testing Certification For Fiber Cable; Damaged Cable Shall Be Replaced. Contractor To Maintain A Test Record And Label Each Strand With Test Date.
3. All Fiber To Be Installed In Innerduct Within Conduits And Multiple Fibers Can Be Pulled In The Same Innerduct If Possible.
4. Fiber To Be Installed Continuous Without Any Splices From MDF To MDF. A 30 Foot Service Loop Shall Be Provided At Terminal Location And Any Manhole Along The Route To Be Coiled Neatly And Secured To A Wall In The POE And MDF Location.
5. Coordinate All Labeling Requirements With TCNJ IT Department And Specifications. Each Cable Shall Be Labled At Each Termination, At Each Tap, Exposed At 15 Foot Intervals, At Each Cabinet / Rack / Panel, At Each Wall Penetration, In Each Manhole In And Out, Etc.
6. All New And Existing Cables And Terminations To Be Tested Upon Completed Installation And Termination. Testing Shall Be Bi-Directional For Optical Loss And OTDR (Tier 1 And Tier 2) To Confirm All Fibers Continuous And With Minimum Loss For Length And Connector Per EIA/TIA And BICSI Standards. Fiber Cable Installation Shall Be To The Requirements Of And Certified Under The Manufacturer's Extended Warranty Program. Furnish Test Results And Manufacturer's Certification At Project Completion.

DOCUMENT ORGANIZATION

Drawings Organization

1. General Information Sheets (G Series)
2. Fire Alarm (FA Series)

Drawing Sequence

Drawings Start With General Information Sheets, Overview Diagrams, And Plan Views Followed By All Other Pertinent Information. Where Effective, Supplemental Information Is Included Directly On The Plan Views.

Drawing Numbering

The Drawing Numbering Strategy And Nomenclature Is As Follows:

X### - XXX

Drawing Trade:
G General
FA Fire Alarm

Unique ID: 1, 2, 3...

Building Identifier

Specifications

A Book Specification Is Provided With These Drawings.

Miscellaneous

1. The Term 'Sheet' Or 'Drawing' Is Used Interchangeably.
2. Printing Of The Plans Is Often Reduced, So A Graphic Scale Is Provided On Each Sheet.
3. For Items That Are Plans, Details, And Other Graphic Items, Titles Are At The Bottom Of The Item Described. For Items That Are Predominately Text Such As Schedules, Titles Are At The Top Of The Item Described.
4. Shading Of An Area Often Is Used To Emphasize An Area To The Reader. Some Of The Possible Purposes Of This Emphasis Can Be:
   - A. Identify Major Pieces Of Equipment.
   - B. Defining A Topics Boundary Without Conflicting With Other Linework.
   - C. Help To Emphasize The Existence Of A Part Plan Of The Area.
   - D. Differentiate Line Work In Congested Areas.

How Notes Are Used

1. General Notes - One Or More In List Form Which Are Not Indicated Specifically On A Plan, Section, Elevation, Or Detail.
2. Notes For This Drawing - General Notes Located Only On The Drawing That Applies.
3. Key Notes - Used In Lieu Of Standard Notes Where They Improve Readability, Key Notes Are Gathered Together And Listed Collectively On The Drawings On Which They Are Located.

Addenda & Revisions

1. Some Addenda And Revisions Are Identified On The Drawings Using A 1 . The Number In The Triangle Links To The Revision Block In The Title Block Section.
2. Sometimes The Most Recent Change Is Clouded To Provide Increased Clarity.

ENVIRONMENTAL SURVEY OBSERVATIONS

The Observations Listed Below Were Compiled Based On Information From TCNJ And Visual Field Inspections At Each Building. Full Building Environmental Surveys Were Not Performed Under This Scope And Underground Conditions Are Unknown. Contractor Shall Thoroughly Investigate Any Proposed Routing For Environmental Hazards.

1. It Is The Contractors Responsibility To Conduct An Environmental Survey And Evaluation Prior To Beginning Rough-In / Installation.
2. If Any Areas Of Asbestos Are Encountered In Any Building And Cannot Be Avoided, Contractor Shall Engage An Environmental Consultant For Testing. Asbestos Abatement, If Required Shall Be Covered Under Environmental Allowance.
3. Green Hall And Recreation Center Both Have Known Areas Of Asbestos In Certain Above Ceiling Areas.
4. Most Older Buildings Have Lead-Based Paint In One Form Or Another And Lead-Safe Work Protocols Shall Be Incorporated Into Standard Work Procedures For This Project Including, But Not Limited To, The Following:
   - A. Contractor To Be EPA Certified In Lead-Based Paint Safe Work Practices and Train All Workers In Said Practices
   - B. Work Area Contaminant To Be Used To Prevent Dust And Debris From Leaving The Work Place
   - C. Thorough Cleaning Followed By Cleaning Verification To Minimize Lead-Based Paint Hazard Exposures.
   - D. No Eating Or Drinking In The Work Area.
   - E. Post Signs Clearly Identifying Work Area.

No.	Drawing Title	Issues / Revisions: ISSUED FOR BID 9/18/2019
GENERAL INFORMATION FOR ALL TRADES		
G000	COVER SHEET	X
G001	GENERAL INFORMATION	X
G002	GENERAL INFORMATION	X
G003	GENERAL DETAILS	X
G004	FIRE ALARM NETWORK OVERVIEW DIAGRAM	X
G005	FIREPROOFING GENERAL SCOPE AND DETAILS	X
G006	DETAILS	X
G007	DETAILS	X
FIRE ALARM		
FA001	CAMPUS OVERVIEW - EXISTING FIBER	X
FA002	CAMPUS OVERVIEW - NEW FIBER & NEW CONDUIT	X
FA003	CAMPUS OVERVIEW - NEW FIBER IN EXISTING EMPTY CONDUIT	X
FA004	CAMPUS FIRE ALARM FIBER OVERVIEW	X
FA005	CAMPUS CONDUIT ROUTING PLAN - ZONE 1	X
FA006	CAMPUS CONDUIT ROUTING PLAN - ZONE 2	X
FA007	CAMPUS CONDUIT ROUTING PLAN - ZONE 3	X
FA008	CAMPUS CONDUIT ROUTING PLAN - ZONE 4	X
FA009	BUILDING FIBER ROUTING	X
FA010	BUILDING FIBER ROUTING	X
FA011	BUILDING FIBER ROUTING	X
FA012	BUILDING FIBER ROUTING	X
FA013	INTERIOR FIBER ROUTING - ADMIN SERVICE BUILDING & AIMM BUILDING	X
FA014	INTERIOR FIBER ROUTING - ARMSTRONG HALL & BIOLOGY BUILDING	X
FA015	INTERIOR FIBER ROUTING - BLISS HALL & BROWER STUDENT CENTER	X
FA016	INTERIOR FIBER ROUTING - BUSINESS BUILDING & CENTENNIAL HALL	X
FA017	INTERIOR FIBER ROUTING - CROMWELL HALL & DECKER GARAGE	X
FA018	INTERIOR FIBER ROUTING - DECKER HALL & ELY-ALLEN-BREWSTER	X
FA019	INTERIOR FIBER ROUTING - EDUCATION, FORCINA GARAGE & EICKHOFF HALL	X
FA020	INTERIOR FIBER ROUTING - FORCINA HALL & GREEN HALL	X
FA021	INTERIOR FIBER ROUTING - HAUSDOERFFER HALL & KENDALL HALL	X
FA022	INTERIOR FIBER ROUTING - GITENSTEIN LIBRARY & MAINTENANCE BUILDING	X
FA023	INTERIOR FIBER ROUTING - METZGER GARAGE & MUSIC BUILDING	X
FA024	INTERIOR FIBER ROUTING - STADIUM & SOCCER FIELD BUILDINGS	X
FA025	INTERIOR FIBER ROUTING - NEW RESIDENCE HALL & NORSWORTHY HALL	X
FA026	INTERIOR FIBER ROUTING - PACKER HALL & PHELPS HALL	X
FA027	INTERIOR FIBER ROUTING - POWERHOUSE & RECREATION CENTER	X
FA028	INTERIOR FIBER ROUTING - ROSCOE WEST HALL & CHEMISTRY BUILDING	X
FA029	INTERIOR FIBER ROUTING - SPIRITUAL CENTER & SOCIAL SCIENCE	X
FA030	INTERIOR FIBER ROUTING - STEM BUILDING & TOWN HOUSE EAST	X
FA031	INTERIOR FIBER ROUTING - TOWN HOUSE SOUTH & TOWN HOUSE WEST	X
FA032	INTERIOR FIBER ROUTING - TRAVERS/WOLFE, T/W GARAGE, & TRENTON HALL	X

KEY PARTICIPANTS & THEIR ROLES

Client
The College Of New Jersey
2000 Pennington Road
Ewing, NJ 08628-0718
Contact: Mumtaz Makhdomi
Email: cplanconsult2@tcnj.edu
Phone: (609)-771-2372

MEP
DLB Associates, PC
265 Industrial Way West
Eatontown, NJ 07724
Contact: Anthony Laskosky - Project Manager
Tel: (732) 927-5038

New Fiber Installation Shall Be Independent Of Existing Fire Alarm Network Cabling Which Shall Remain Intact And Operational For The Extent Of This Project.

ITEM	DATE	ISSUE DESCRIPTION	ITEM	DATE	ISSUE DESCRIPTION
4					
3					
2					
1	09/18/19	ISSUED FOR BID			

30x42

dlb associates
CONSULTING ENGINEERS, P.C.
265 Industrial Way West, Eatontown, N.J. 07724
Questions For DLB Call: Anthony Laskosky
DLB Project ID: 47211 Phone: 732-927-5038

PAUL B. ESTILOW, P.E.
LIC. # 24GE03660300
Date: AUGUST 27, 2019

project: TCNJ - CAMPUS FIRE ALARM CABLE INFRASTRUCTURE UPGRADES 2000 PENNINGTON ROAD, EWING NJ, 08618

title: GENERAL INFORMATION

scale	drawn by	checked by	date
AS SHOWN	SC	SG	09/18/2019

dwg. no. G001

This Drawing Is The Property Of DLB Associates Consulting Engineers, PC. It Was Prepared Exclusively For This Particular Project And Is Limited To This Project Only. Unauthorized Reproduction Or Other Use Of These Drawings Or Ideas Is Prohibited.

Confidential and Proprietary / ©DLB Associates 2019

TREE REPLACEMENT GUIDELINES

1. Prior To Removal, All Trees Must Be Tagged And Approved For Removal By The TCNJ Grounds Crew.
2. All Trees That Have The Root System Disturbed, But Are Not To Be Removed Shall Have An Arborist Perform Root Pruning Along The Trenched Side Of The Root System.
3. No Stockpiling Of Excavated Dirt Shall Be Stored On The Root System Within 15 Feet Of The Base Of Remaining Trees. Prior To Trenching Contact TCNJ Grounds Crew To Mark Out A Radius As A Guide For Stock Piled Dirt Along The Trench.
4. Several Excavation Areas Contain Site Lighting Near Streets And Sidewalks. In The Event That Site Lighting Fixtures, Conduit, Or Supports Are Disturbed During Construction Or Tree Removal Process The General Contractor Must Repair As Required To Maintain Existing Conditions.
5. Unless Otherwise Noted, Trees Shall Be Replaced 1 For 1 With A Tree Of The TCNJ Ground Crew's Choosing. TCNJ's Specified Replacement Guide Is Listed On This Plan For Reference.
6. General Contractor Shall Visit The Site Prior To Bidding And Notify TCNJ/DLB Of Discrepancies In An RFI During The Questions Period Of The Bid Milestone Schedule.

SOIL EROSION AND SEDIMENT CONTROL NOTES

Soil And Erosion Control Shall Comply With The Requirements Of The Mercer County Soil Conservation District With The Following Additional Requirements:

1. The Contractor Shall Only Excavate That Portion Of The Trench That The Contractor Can Install The Pipe, Backfill The Trench And Stabilize In A Day.
2. Where A Portion Of The Trench Is Required To Remain Open. Erosion And Sediment Control Devices (Silt Fence And Silt Sack For Inlets As Indicated) Shall Be Installed Along Level Sections Of The Project.
3. The Contractor Shall Not Commence Excavation During Periods Of Expected Poor Weather Conditions.
4. Mud And Sediment Shall Be Washed Off Of The Construction Equipment While On Site To Prevent Migration Of Sediment From The Site.
5. Stabilization Of The Backfilled Trench Shall Conform To The Requirements Of The Mercer County Soil's Requirements For Permanent Vegetative Cover For Soil Stabilization.

MANAGEMENT OF HIGH ACID PRODUCING SOILS

General Requirements

1. Limit The Excavation Area And Exposure Time When High Acid Producing Soils Are Encountered.
2. Topsoil Stripped From The Site Shall Be Stored Separately From Temporarily Stockpiled High Acid-Producing Soils.
3. Stockpiles Of High Acid-Producing Soils Should Be Located On Level Land To Minimize Its Movement, Especially When This Material Has High Clay Content.
4. Temporarily Stockpiled High Acid-Producing Soil Material To Be Stored More Than 48 Hours Should Be Covered With Properly Anchored, Heavy Grade Sheets Of Polyethylene Where Possible. If Not Possible, Stockpiles Should Be Covered With A Minimum Of 3 To 6 Inches Of Wood Chips To Minimize Erosion Of The Stockpile. Silt Fence Shall Be Installed At The Toe Of The Slope To Contain Movement Of The Stockpiled Material. Topsoil Shall Not Be Applied To The Stockpiles To Prevent Topsoil Contamination With High Acid-Producing Soil.
5. High Acid-Producing Soils With A pH Of 4.0 Or Less Or Containing Iron Sulfide (Including Borrow Cuts Or Dredged Sediment) Shall Be Ultimately Placed Or Buried With Limestone Applied At The Rate Of 10 Tons Per Acre (Or 450 Pounds Per 1,000 Square Feet Of Surface Area) And Covered With A Minimum Of 12 Inches Of Settled Soil With A pH Of 5.0 Or More Except As Follows:
   - Disposal Areas Shall Not Be Located Within 24 Inches Of Any Surface Of A Slope Or Bank, Such As Berms, Stream Banks, Ditches, And Others, To Prevent Potential Lateral Leaching Damages.
6. Equipment Used For Movement Of High Acid-Producing Soils Should Be Cleaned At The End Of Each Day To Prevent Spreading Of High Acid-Producing Soil Materials to Other Parts Of The Site, Into Streams Or Stormwater Conveyances, And To Protect Machinery From Accelerated Rusting.
7. Non-Vegetative Erosion Control Practices (Stone Tracking Pads, Strategically Placed Limestone Check Dam, Sediment Barrier, Wood Chips) Should Be Installed To Limit The Movement Of High Acid-Producing Soils From, Around, Or Off The Site.
8. Following Burial Or Removal Of High Acid-Producing Soil, Topsoiling And Seeding Of The Site (See Temporary Vegetative Cover For Soil Stabilization, Permanent Vegetative Cover For Soil Stabilization, And Topsoiling), **Monitoring Must Continue For A Minimum Of 6 Months** To Ensure There Is Adequate Stabilization And That No High Acid-Producing Soil Problems Emerge. If Problems Still Exist, The Affected Area Must Be Treated As Indicated Above To Correct The Problem.

PERMANENT VEGETATIVE COVER FOR SOIL STABILIZATION

Topsoil Stripping And Stockpiling

1. Field Exploration Should Be Made To Determine Whether Quantity And / Or Quality Of Surface Soil Justifies Stripping.
2. A 6-Inch Stripping Depth Is Typical, But May Vary Depending On The Particular Soil Structure Or Pre-Existing Use.
3. Stockpiles Should Be Located So As To Not Obstruct Natural Drainage Or Cause Off-Site Environmental Damage, And Shall Be Delineated On The Certified Soil Erosion And Sediment Control Plan And Be Constructed In Accordance With The Topsoil Stockpile Detail.
4. Stockpiles Should Be Temporarily Stabilized According To The Standards.

Site Preparation

1. Install Erosion Control Measures And Facilities Such As Silt Fence, Diversions, Sediment Basins, And Channel Stabilization.
2. Grade As Needed And Feasible To Permit The Use Of Conventional Equipment For Seedbed Preparation, Seeding, Mulch Application, Tacking, And Maintenance. All Grading Shall Be In Accordance With Standard For Land Grading, 19-1.
3. The Contractor Responsible For Site Preparation, Seeding, And Mulching Shall Have A Minimum Of 5 Years Professional Experience.

Seedbed Preparation

1. Topsoil Required:

   Minimum Depth: 6" (Unsettled)
   pH: 6.0 To 8.0
   Organic Matter Content: 2.75% Minimum
   Nitrate N2: 50 Pounds Per Acre (50% Water Insoluble)
   Phosphorous: 100 Pounds Per Acre
   Potassium: 50 Pounds Per Acre
2. The Contractor Should Be Aware Of The Possibility, Depending Upon The Site Conditions, That All Topsoil May Have To Be Provided From An Off-Site Source.
3. Topsoil Should Be Handled Only When Dry Enough To Work Without Damaging Soil Structure.
4. Apply A Uniform 6 Inches (Unsettled) Of Topsoil On All Disturbed Areas. Soils With A pH Of 4.0 Or Less Or Containing Iron Sulfide Shall Be Covered With A Minimum Depth Of 12 Inches Of Soil Having A pH Of 5.0 Or More And The Top 5 Inches Shall Conform To the Topsoil Standard And Shall Be Limed According To The Specifications.
5. If The Topsoil Becomes Compacted, The Surface Must Be Scarified 6" To 12" To Provide Good Seed-To-Soil Bond.
6. Apply Limestone And Fertilizer According To Soil Test Recommendations Such As Those Offered By Rutgers University Cooperative Extension. If Soil Testing Is Not Feasible, Fertilizer (10-20-10) With 50% Water Insoluble Nitrogen Should Be Applied At The Typical Rate Of 500 Pounds Per Acre Or 11 Pounds Per 1,000 Square Feet.
7. Apply Limestone Equivalent To 50% Calcium Plus Magnesium Oxides (Pulverized Dolomitic Limestone Is Preferred For Most Soils South Of The New Brunswick - Trenton Fall Line) As Follows:

SOIL TEXTURE	TONS / ACRE	LBS / 1000 SQ. FT
CLAY, CLAY LOAM, HIGH ORGANIC	3	135
SANDY LOAM, LOAM, SILT LOAM	2	90
LOAMY SAND, SAND	1	45

8. Work Lime And Fertilizer Into Soil To A Depth Of 4 Inches. The Final Harrowing Or Disc Operation Should Be On The General Contour. Continue Tillage Until A Uniform, Fine Seedbed Is Prepared.
9. Remove From The Surface All Stones 2 Inches Or Larger In Any Dimension, And Other Objectionable Stones Or Debris Such As Wire, Tree Roots, Pieces Of Concrete, Clods, Lumps, Or Other Unsuitable Material.

Seeding

1. Select A Seed Mixture Approved By The Mercer County Soils Conservation District.
2. Apply Seed Uniformly By Hand, Cyclones, Drop Seeder, Drill Cultipacker, Or Hydroseeder. The Latter May Be Justifiable For Large, Steep Areas Where Conventional Applications Are Not Feasible. Hydroseeding Shall Be A Two Step Process: Mulch Shall Not Be Mixed With The Seed; The Seed Must Be Applied First To Assure Proper Seed To Soil Contact. The Hydromulch Is Then Sprayed Over The Seeding. For Optimum Results, The Seed Should Be Incorporated Into The Soil To A Depth Of 1/4 To 1/2 Inch Depending Upon Species.
3. After Seeding, The Soil Should Be Packed With A Corrugated Roller. When Performed On The Contour, Rolling Will Minimize Sheet Erosion And Maximize Water Conservation.

PERMANENT VEGETATIVE COVER FOR SOIL STABILIZATION (CONTINUED)

Mulching

1. Unrotted Straw, Hay Free Of Seeds, Or Salt Hay Is Required On All Seeding At A Rate Of 1.5 To 2 Tons Per Acre, (70 To 90 Pounds Per 1,000 Square Feet), Except Where A Crimper Is Used Instead Of A Liquid Mulch-Binder, Then The Rate Of Application Is 3 Tons Per Acre.
2. Mulch Anchoring Should Be Accomplished Immediately After Placement To Minimize Loss Due To Wind Or Water. This May Be Done According To The Following Methods:
   - Wood-Fiber Or Paper-Fiber Mulch At The Rate Of 1,500 Pounds Per Acre Applied By The Hydroseeder. Use Is Limited To Only The Optimum Seeding Season.
   - Synthetic Or Organic Binders
   - Peg And Twine, Mulch Netting, And Mechanical Crimping.
   - Crimping Requires A Higher Mulch Rate (3 Tons Per Acre)

Note
1. One Bale Of Hay Weighs 40-60 Pounds Depending On How It Was Baled.

A 1,500 Tank Of Hydromulch Covers 0.5 Acres.

Temporary Seeding Mixes

1. Mix: Early Spring / Late Summer To Early Fall
   - 100% Perennial Ryegrass
   - Rate: 100 Pounds Per Acre
2. Mix: Mid-Summer
   - 40% Pearl Millet
   - 40% Millet (German Or Hungarian)
   - 20% Weeping Lovegrass
   - Rate: 100 Pounds Per Acre

Permanent Seeding Mixes

1. Optimum Seeding Dates: March 1 To May 15 And August 15 To October 15
   - Application Rate: 200 Pounds Per Acre
   - 70% Turf Type Tall Fescue
   - 20% Perennial Ryegrass
   - 10% Kentucky Bluegrass

TOPSOILING

Materials

1. Topsoil Should Be Friable, Loamy, Free Of Debris, Objectionable Weeds And Stones, And Contain No Toxic Substance Or Adverse Chemical Or Physical Condition That May Be Harmful To Plant Growth. Soluble Salts Should Not Be Excessive (Conductivity Less Than 0.5 Millimhos Per Centimeter. More Than 0.5 Millimhos May Dessicate Seedlings And Adversely Impact Growth). Topsoil Must Have An Organic Matter Content No Less Than That Shown In The Table Below.

TARGET ORGANIC MATTER (TOM) CONTENT BY SOIL TEXTURE	
SOIL TEXTURE CLASS	MINIMUM SOIL ORGANIC MATTER (% BY MASS)
SANDY AND LOAMY SAND	2.0
SANDY LOAM	2.5
LOAM	4.0
SILT LOAM, ALL CLAY LOAMS, AND CLAY	5.0

   Organic Matter Content May Be Raised If Necessary By The Addition And Mixing Of Additives Which Conform To the Following Specifications:
   - No Undigested (Raw) Material Greater Than 10% By Volume
   - No Trash
   - No Rocks Or Stones Larger Than 0.5"
   - No Raw Or Fresh Manure (Green Or Otherwise). Compost Must Be Fully Decomposed.
   - Quality Of Organic Matter (Compost) Must Be Verified Through Certification From The Supplier In Accordance With NJ DEP Solid Waste Requirements At NJAC 7:26A-4.5(b).
2. Organic Matter Shall Be Blended With Topsoil By Any Of The Following Methods:
   - Blending In Bulk Either On Site Or By The Supplier. Supplier Is To Provide Written Verification Of Quality And Amount Of Organic Material Used In Blending Including Final OM Content In Percent By Weight With NJ DEP Requirements.
   - Spread As A Second Layer Over Topsoil Which Has Been Previously Placed, And Then Blended With A Disk Harrow, Tractor Mounted Tiller Or Similar Equipment To Uniformly Incorporate Organic Matter (See Item 3 Below To Determine Proper Amount Of Compost To Be Spread Per Acre For Incorporation) Into Topsoil.
   - Small Areas May Have Organic Matter Incorporated By Hand Or With A Rotor Tiller.
   - Subsequent Compaction Remediation By Ripping May Be Required In Accordance With The Standard For Land Grading (19-1).
3. The Quantity Of Organic Matter To Be Added Shall Be Determined By The Following Formula:

   SOM = Existing Organic Matter Fraction (Expressed As A Decimal)
   TOM = Target OM Value (From Table, Expressed As A Decimal Fraction)
   COM = Compost Organic Matter Fraction
   CV = Compost Volume Required (Cubic Yards Per Acre)
   CV = 2375 x [(TOM - SOM) / (COM)]
4. Topsoil Substitute Is A Soil Material Which May Have Been Amended With Sand, Silt, Clay, Organic Matter, Fertilizer Or Lime And Has The Appearance Of Topsoil. Topsoil Substitutes May Be Utilized On Sites With Insufficient Topsoil For Establishing Permanent Vegetation. All Topsoil Substitute Materials Shall Meet The Requirements Of Topsoil Noted Above. Soil Tests Shall Be Performed To Determine The Components Of Sand, Silt, Clay, Organic Matter, Soluble Salts And pH Level.
5. Topsoil And Organic Matter Criteria For Stabilization In The Pinelands National Reserve Shall Conform To The Requirements Established In The Standard For Permanent Vegetative Stabilization.

Stripping And Stockpiling

1. Field Exploration Should Be Made To Determine Whether Quantity And Or Quality Of Surface Soil Justifies Stripping.
2. Stripping Should Be Confined To The Immediate Construction Area.
3. Where Feasible, Lime May Be Applied Before Stripping At A Rate Determined By Soil Tests To Bring The Soil pH To Approximately 6.5. In Lieu Of Soil Tests, See Lime Rate Guide In Seedbed Preparation For Permanent Vegetative Cover For Soil Stabilization.
4. A 4-6 Inch Stripping Depth Is Common, But May Vary Depending on the Particular Soil.
5. Stockpiles Of Topsoil Should Be Situated So As Not To Obstruct Natural Drainage Or Cause Off-Site Environmental Damage.
6. Stockpiles Should Be Vegetated In Accordance With Standards Previously Described Herein; See Standards For Permanent Or Temporary Vegetative Cover For Soil Stabilization. Weeds Should Not Be Allowed To Grow On Stockpiles.
7. Coordinate With College For Stockpile Locations.

Site Preparation

1. Grade At The Onset Of The Optimal Seeding Period So As To Minimize The Duration And Area Of Exposure Of Disturbed Soil To Erosion. Immediately Proceed To Establish Vegetative Cover In Accordance With The Specified Seed Mixture. Time Is Of The Essence.
2. Grade As Needed And Feasible To Permit The Use Of Conventional Equipment For Seedbed Preparation, Seeding, Mulch Application And Anchoring, And Maintenance. See The Standard For Land Grading.
3. As Guidance For Ideal Conditions, Subsoil Should Be Tested For Lime Requirement. Limestone, If Needed, Should Be Applied, Should Be Applied To Bring Soil pH Of Approximately 6.5 And Incorporated Into The Soil As Nearly As Practical To A Depth Of 4 Inches.

TOPSOILING (CONTINUED)

4. Employ Needed Erosion Control Practices Such As Diversions, Grade Stabilization Structures, Channel Stabilization Measures, Sedimentation Basins, And Waterways.

Applying Topsoil

1. Topsoil Should Be Handled Only When It Is Dry Enough To Work Without Damaging Soil Structure; i.e., Less Than Field Capacity.
2. A Uniform Application To A Depth Of 6 Inches (Unsettled) Is Required. Soils With A pH Of 4.0 Or Less Or Containing Iron Sulfide Shall Be Covered With A Minimum Depth Of 12 Inches Of Topsoil Having A pH Of 5.0 Or More, In Accordance With The Standard For Management Of High Acid Producing Soil.
3. Topsoil Should Be Finish Graded With Low Ground Pressure Equipment Or By Hand When Practical And Feasible To Reduce The Potential For Re-Compacting The Subsoil.

MERCER COUNTY SOIL EROSION AND SEDIMENT CONTROL NOTES

1. The Mercer County Soil Conservation District Shall Be Notified 48 Hours Prior To Starting Land Disturbance Activity. Notice May Be Mailed, Faxed Or Emailed To: MCSCD, 590 Hughes Drive, Hamilton Square, NJ 08690
   Phone: 609-586-9603 Fax: 609-586-1117 Email: Pauls1mercer@aol.com
2. If Applicable To This Project, The Owner Should Be Aware Of His Or Her Obligation To File For A NJPDES Construction Activity Stormwater 5G3 Permit (NJG0088323) Via The NJDEP Online Permitting System (www.nj.gov/dep/online) And To Maintain The Associated Best Management Practices And Stormwater Pollution Prevention Plan Self-Inspection Logbook Onsite At All Times. This Permit Must Be Filed Prior To The Start Of Soil Disturbance. The Online Application Process Will Require Entry Of An SCD Certification Code, Which Is Provided By The Soil Conservation District Upon Certification Of The Soil Erosion And Sediment Control Plan.
3. The Mercer County Soil Conservation District Shall Be Notified Of Any Changes In Ownership.
4. Any Changes To The Certified Soil Erosion And Sediment Control Plan, Including An Increase In The Limit Of Disturbance, Will Require The Submission Of Revised Soil Erosion And Sediment Control Plans To The District For Recertification. The Revised Plans Must Meet All Current State Soil Erosion & Sediment Control Standards.
5. A Copy Of The Certified Soil Erosion And Sediment Control Plan Shall Be Maintained On Site At All Times.
6. All Soil Erosion And Sediment Control Practices Shall Be Installed Prior To Any Major Soil Disturbances, Or In Their Proper Sequence As Outlined Within The Sequence Of Construction On The Certified Soil Erosion And Sediment Control Plan, And Maintained Until Permanent Protection Is Established.
7. All Work Shall Be Done In Accordance With The Current Standards For Soil Erosion And Sediment Control In NJ. If Language Contained Within Any Other Permit For This Project Is More Restrictive Than (But Not Contradictory To) What Is Contained Within These Notes Or On The Certified Soil Erosion And Sediment Control Plan, Then The More Restrictive Permit Requirements Shall Be Followed.
8. The Standard For Stabilized Construction Access Requires The Installation Of A 1½" To 2½" Clean Stone Tracking Pad At All Construction Driveways Immediately After Initial Site Disturbance, Whether Identified On The Certified Plan Or Not. The Width Shall Span The Full Width Of Egress, And Length Shall Be 50 Ft. Or More, Depending On Site Conditions And As Required By The Standard. This Shall Include Individual Lot Access Points Within Residential Subdivisions. If The Egress Is To A County Road, Then A 20 Ft. Long Paved Transition Shall Be Provided Between The Edge Of Pavement And The Stone Access Pad.
9. A Sub-Base Course Will Be Applied Immediately Following Rough Grading And Installation Of Improvements In Order To Stabilize Streets, Roads, Driveways And Parking Areas. In Areas Where No Utilities Are Present, The Sub-Base Shall Be Installed Within 15 Days Of Preliminary Grading, Provided That All Other Requirements Related To Detention Basins, Swales And The Sequence Of Construction Have Been Met.
10. Any Disturbed Areas That Will Be Left Exposed More Than 14 Days And Not Subject To Construction Activity Will Immediately Receive Temporary Stabilization. If the Season Prevents Establishment Of A Temporary Vegetative Cover, Or If The Area Is Not Topsoiled, Then The Disturbed Areas Will Be Mulched With Straw, Or Equivalent Material, At A Rate Of Two (2) Tons Per Acre, According To State Standards. Sloped Areas In Excess Of 3H:1V Shall Be Provided With Erosion Control Blankets. Critical Areas Subject To Erosion (I.E. Steep Slopes, Roadway Embankments, Environmentally Sensitive Areas) Will Receive Temporary Stabilization Immediately After Initial Disturbance Or Rough Grading
11. Any Steep Slopes (I.E. Slopes Greater Than 3:1) Receiving Pipeline Or Utility Installation Will Be Backfilled And Stabilized Daily, As The Installation Proceeds.
12. Permanent Vegetation Shall Be Seeded Or Sodded On All Exposed Areas Within Ten (10) Days After Final Grading And Topsoiling. All Agronomic Requirements Contained Within The Standards And On The Certified Plan Shall Be Employed. Mulch With Binder, In Accordance With The Standards, Shall Be Used On All Seeded Areas. Save All Tags And/Or Bags Used For Seed, Lime And Fertilizer, And Provide Them To The District Inspector To Verify That Mixtures And Rates Meet The Standards.
13. At The Time When The Site Preparation For Permanent Vegetative Stabilization Is Going To Be Accomplished, Any Soil That Will Not Provide A Suitable Environment To Support Adequate Vegetative Ground Cover, Shall Be Removed Or Treated In Such A Way That Will Permanently Adjust The Soil Conditions And Render It Suitable For Vegetative Ground Cover. If The Removal Or Treatment Of The Soil Will Not Provide Suitable Conditions, Then Non-Vegetative Means Of Permanent Ground Stabilization Will Have To Be Employed.
14. During The Course Of Construction, Soil Compaction May Occur Within Haul Routes, Staging Areas And Other Project Areas. In Accordance With The Standard For Topsoiling, Compacted Surfaces Should Be Scarified 6" To 12" Immediately Prior To Topsoil Application. This Will Help Ensure A Good Bond Between The Topsoil And Subsoil. This Practice Is Permissible Only Where There Is No Danger To Underground Utilities (Cables, Irrigation Systems, Etc.).
15. Prior To Seeding, Topsoil Shall Be Worked To Prepare A Proper Seedbed. This Shall Include Raking Of The Topsoil And Removal Of Debris And Stones, Along With Other Requirements Of The Standard For Permanent Vegetative Cover For Soil Stabilization.
16. In Accordance With The Standard For Management Of High Acid Producing Soils, Any Soil Having A pH Of 4 Or Less Or Containing Iron Sulfides Shall Be Buried With Limestone In Accordance With The Standard And Be Covered With A Minimum Of 12" Of Soil Having A pH Of 5 Or More Prior To Topsoil Application And Seedbed Preparation. If The Area Is To Receive Tree Or Shrub Plantings, Or Is Located On A Slope, Then The Area Shall Be Covered With A Minimum Of 24" Of Soil Having A Ph Of 5 Or More.
17. Mulching To The Standards Is Required For Obtaining A Conditional Report Of Compliance. Conditional ROC's Are Only Issued When The Season Prohibits Seeding. Permanent Stabilization Must Then Be Completed During The Optimum Seeding Season Immediately Following The Conditional ROC, Or The Completion Of Work In A Given Area.
18. Hydroseeding Is A Two-Step Process. The First Step Includes Seed, Fertilizer, Lime, Etc., Along With Minimal Amounts Of Mulch To Promote Consistency, Good Seed-To-Soil Contact, And Give A Visual Indication Of Coverage. Upon Completion Of The Seeding Operation, Hydromulch Should Be Applied At A Minimum Rate Of 1500 Lbs. Per Acre In Second Step. The Use Of Hydro-Mulch, As Opposed To Straw, Is Limited To Optimum Seeding Dates As Listed In The Standards. The Use Of Hydromulch On Sloped Areas Is Discouraged.
19. The Contractor Is Responsible For Keeping All Adjacent Roads Clean During Life Of The Construction Project. All Sediment Washed, Dropped, Tracked Or Spilled Onto Paved Surfaces Shall Be Immediately Removed.
20. The College Shall Be Responsible For Remediating Any Erosion Or Sediment Problems That Arise As A Result Of Ongoing Construction, And For Employing Additional Erosion And Sediment Control Measures At The Request Of The Mercer County Soil Conservation District.
21. Conduit Outlet Protection Must Be Installed At All Required Outfalls Prior To The Drainage System Becoming Operational.
22. All Detention / Retention Basins Must Be Fully Constructed (Inclusive Of All Structural Components And Liners) And Permanently Stabilized Prior To Paving Or Prior To The Addition Of Any Impervious Surfaces. Permanent Stabilization Includes, But May Not Be Limited To: Topsoil, Seed, Straw Mulch And Binders Or Erosion Control Blankets On All Seeding, All Agronomic Requirements As Specified On The Certified Soil Erosion And Sediment Control Plan, Installation Of The Outflow Control Structures And Discharge Storm Drainage Piping, Low Flow Channels, Conduit Outlet Protection, Emergency Spillways, And Lap Ring Protection.
23. The Riding Surface Of All Utility Trenches Within Paved Areas Shall Be 3/4" Clean Stone Or Base Pavement Until Such Time As Final Pavement Has Been Installed. Temporary Soil Riding Surfaces Are Prohibited.
24. All Construction Dewatering (Trenches, Excavations, Etc.) Must Be Done Through An Inlet Or Outlet Filter In Accordance With The Standard For Dewatering Or As Depicted On The Certified Soil Erosion And Sediment Control Plan. Discharge Locations For The Dewatering Operation Must Contain Perennial Vegetation Or Similar Stable Surface.
25. All Swales Or Channels That Will Receive Runoff From Paved Surfaces Must Be Permanently Stabilized Prior To The Installation Of Pavement. If The Season Prohibits The Establishment Of Permanent Stabilization, The Swales Or Channels May Be Temporarily Stabilized In Accordance With The Standards.
26. Stockpiling Shall Not Be Permitted On Paved Driveways Or Within Paved Parking Lots. Coordinate Stockpile Location With TCNJ.

PARTIAL SYMBOL LIST

Ⓣ Tree To Be Removed And Replaced

Ⓑ Bush To Be Removed And Replaced

TREE REPLACEMENT GUIDE

Replace Removed Trees With One Of The Following (Coordinate Selection With TCNJ):

1. Cornus Florida (Flowering Dogwood) - 2" Caliper
2. Prunus Kwanzan (Kwanzan Cherry) - 2" Caliper
3. Prunus Serrulata (Japanese Flowering Cherry) - 2" Caliper
4. Ilex Opaca (American Holly) - 2" Caliper
5. Cersis Canadensis (Eastern Redbud) - 2" Caliper
6. Quercus Palustris (Pin Oak) - 5" Caliper

CAMPUS TREE PLAN | Scale: NTS | Drawing: G002 | Detail: 01

30x42

ITEM	DATE	ISSUE DESCRIPTION	ITEM	DATE	ISSUE DESCRIPTION
1	09/18/19	ISSUED FOR BID			

dlb associates
CONSULTING ENGINEERS, P.C.
265 Industrial Way West, Eatontown, N.J. 07724
Questions For DLB Call: Anthony Laskosky
DLB Project ID: 47211 Phone: 732-927-5038

project: TCNJ - CAMPUS FIRE ALARM CABLE INFRASTRUCTURE UPGRADES 2000 PENNINGTON ROAD, EWING NJ, 08618

title: GENERAL INFORMATION

scale	drawn by	checked by	date
AS SHOWN	SC	SG	09/18/2019

dwg. no. G002

This Drawing Is The Property Of DLB Associates Consulting Engineers, PC. It Was Prepared Exclusively For This Particular Project And Is Limited To This Project Only. Unauthorized Reproduction Or Other Use Of These Drawings Or Ideas Is Prohibited.

Confidential and Proprietary / ©DLB Associates 2019

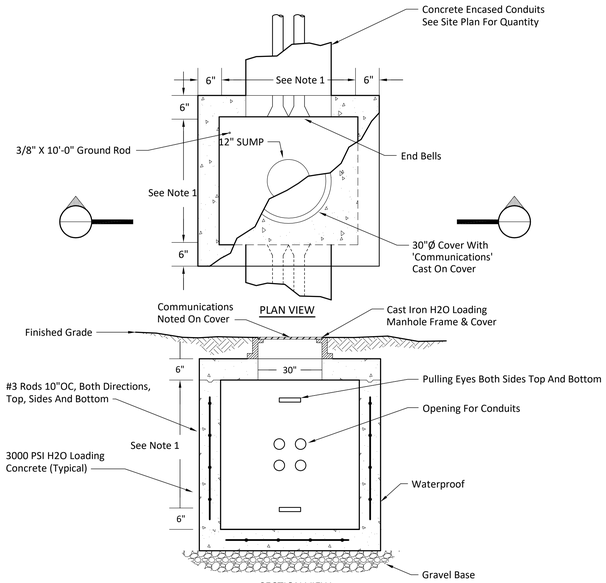

NOTES:
1. See Campus Plans For Manhole Locations And Size Selections:
   - G003 01(X) — "X" Indicates Size Of Manhole Small (S), Medium (M)
   - Small (S) - 4' x 4' x 6' (L x W x D) Interior Dimensions
   - Medium (M) - 6' x 6' x 8' (L x W x D) Interior Dimensions
   - Large (L) - 8' x 8' x 8' (L x W x D) Interior Dimensions
2. Grounding Shall Include Ground Ring "Halo" Within Manhole; 4/0 Bare Copper Secured Around The Perimeter Of The Top Of The Manhole, Cad-Weld To The Ground Rod.
3. Cover Shall Have Rim And "Open Pick" Holes For Access.
4. Cover Frame Shall Be Bolted To The Structure. Any Required Riser Rings Shall Be Secured To Each Other And To The Manhole Top.
5. Cable Racking Assemblies Shall Be Hot Dipped Galvanized Cable Racks With A Plastic Coating Over The Galvanizing, Shall Be Installed In Each Communication Manhole. Racking Supports Shall Extend Floor To Ceiling Of Manhole, With A Minimum Of Three Supports Per Side, Distributed Evenly Across The Wall. Provide 3 Racking Hooks Per Racking Wall. Two Of Which Shall Have 3" Arms And 1 Shall Have 18" Arm.

COMMUNICATION CONCRETE MANHOLE DETAIL | Scale: NTS | Drawing: **G003** | Detail: **01**

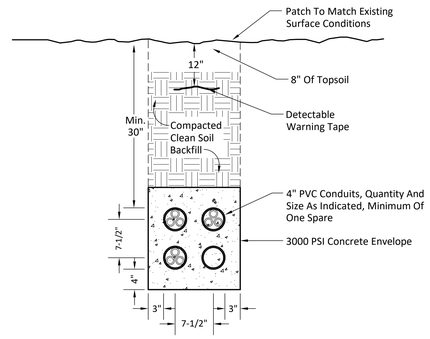

NOTES:
1. All Depth Measurements Shall Be Measured From Finished Grade To The Top Of The Top Conduit.
2. Minimum Burial Depth Shall Be 30 Inches Unless Otherwise Noted, Or As Required For Short Distances Based On Site Conditions To Avoid Conflicts.
3. Maintain Uniform Spacing Using Conduit Spacers Along The Entire Length (Not Shown For Clarity).
4. Install Detectable Mule Tape In All Conduits; Leave Slack Within Manhole For Access. Label Each Muletape In Accordance With Cable Labeling Requirements.
5. Install 3, 1-1/4" Innerducts In All Active Conduits.
6. Conduits To Be Proven And Cleaned As Part Of The Installation.Proving Involves Dragging A Proving Mandrell Sized To The Conduit, Through The Conduit To Confirm Each Is Capable Of Being Used To Capacity And Has No Blockages, Gross Deformations, Or Snags.
7. New Duct Banks Are Not To Be Supported By Any Existing Structures.
8. Contractor Shall Provide / Complete A Mock Up For Backfilling And Compaction For Review And Approval By The College.

DUCT BANK DETAIL | Scale: NTS | Drawing: **G003** | Detail: **02**

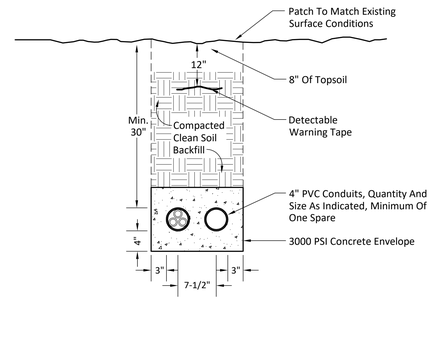

NOTES:
1. All Depth Measurements Shall Be Measured From Finished Grade To The Top Of The Top Conduit.
2. Minimum Burial Depth Shall Be 30 Inches Unless Otherwise Noted, Or As Required For Short Distances Based On Site Conditions To Avoid Conflicts.
3. Maintain Uniform Spacing Using Conduit Spacers Along The Entire Length (Not Shown For Clarity).
4. Install Detectable Mule Tape In All Conduits; Leave Slack Within Manhole For Access. Label Each Muletape In Accordance With Cable Labeling Requirements.
5. Install 3, 1-1/4" Innerducts In All Active Conduits.
6. Conduits To Be Proven And Cleaned As Part Of The Installation.Proving Involves Dragging A Proving Mandrell Sized To The Conduit, Through The Conduit To Confirm Each Is Capable Of Being Used To Capacity And Has No Blockages, Gross Deformations, Or Snags.
7. New Duct Banks Are Not To Be Supported By Any Existing Structures.
8. Contractor Shall Provide / Complete A Mock Up For Backfilling And Compaction For Review And Approval By The College.

DUCT BANK DETAIL | Scale: NTS | Drawing: **G003** | Detail: **03**

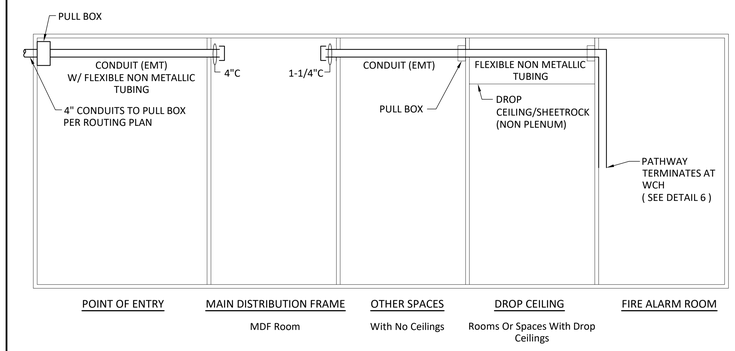

NOTES:
1. Coordinate With Existing Ceiling Conditions And TCNJ IT Department Based On Final Routing.
2. Entire Cable Routing Shall Be Enclosed In Pathway (Conduit/ Flexible Non Metallic Tubing). Install 24"X 30"X 18" Pull Box At POE And Other Locations where Cable Transitions Between Pathway Types Or Exceeds Bend Requirements.
3. Flexible Tubing Complement Continues From OSP Pathway System Via Conduit Into Interior Ceiling Space. Extend Sufficient Flexible Tubing From Conduit Termination To Convey Fiber To Main Distribution Frame.
4. Flexible Tubing Shall Be Routed In Conduit Or Transitioned To Flexible Non Metallic Tubing Where Exposed In Open Ceiling.
5. Refer To Interior Fiber Routing Plan And Specifications For Further Information On Conduit Pathways / Routings.
6. 4" Conduit To Have Three (3) 1-1/4" ENT With Pullstrings.

TYPICAL FIBER PATHWAY ROUTING | Scale: NTS | Drawing: **G003** | Detail: **04**

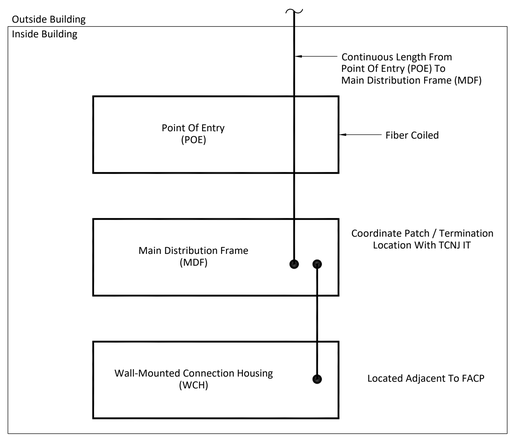

NOTES:
1. 30 Ft. Slack Loop To Be Provided At Manholes (One In The Run), Building's Point Of Entry (POE), And Building's Main Distribution Frame (MDP). If Exterior Run Between Buildings Exceeds 400Ft. , Provide A Second Slack Loop In Manhole. See Specifications For Further Details.

FIRE ALARM FIBER ENCLOSURE INSTALLATION BLOCK DIAGRAM | Scale: NTS | Drawing: **G003** | Detail: **05**

SCIENCE COMPLEX FACP
Fiber Installed In The Science Complex Building Installed Per TCNJ Standards

SCIENCE COMPLEX FACP
Fiber Installed In The Science Complex Building Installed Per TCNJ Standards

WALL MOUNT CONNECTOR HOUSING
An Example Of WCH Mounted On The Wall Within The Stem Building

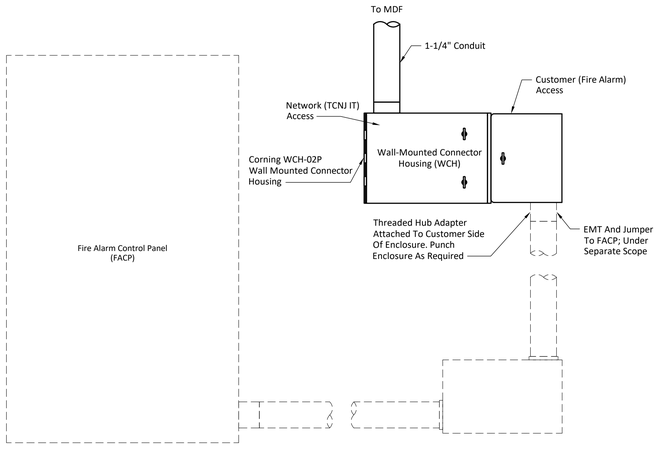

WALL-MOUNTED CONNECTOR HOUSING
TCNJ Specified Wall-Mounted Connector Housing (WCH) To Be Used Within Building

NOTES:
1. Coordinate Position of Fiber Enclosure Routing Of EMT and Installation Of EMT Into FACP Enclosure With Respect To Fiber Termination Connections In FACP Enclosure, And With TCNJ/IT
2. Install Fiber Enclosure At Working Height (~5').
3. Install 1 ½ " Innerduct Or EMT From Fiber Enclosure To MDF/IDF Room For Fiber Riser Installation. Coordinate Requirements with TCNJ/IT.
4. Install Pull Points At Transitions And 90 Degree Elbows / Corners.
5. Install Pathway No More Than 180° Bends.

FIRE ALARM FIBER ENCLOSURE INSTALLATION | Scale: NTS | Drawing: **G003** | Detail: **06**

12" DEEP - WALL MOUNTED CABINET
Similar To Chatsworth Part No. 13050-723, THINLINE-II, With Overall Dimensions 36"H X 26"W X 12"D, Black.

30" DEEP - WALL MOUNTED CABINET
Similar To CUBE-iT Wall-Mount Cabinet; Gen 3; 48"H x 24"W x 30"D (1220 mm x 610 mm x 760 mm); 26U; #12-24 Tapped Rails; Tempered Glass Door; Black

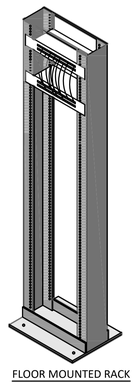

FLOOR MOUNTED RACK
(TWO POST RACK)

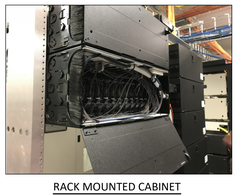

RACK MOUNTED CABINET

NOTES:
1. Coordinate Specific Rack Requirements With TCNJ IT Department.
2. Entire Cable Routing Shall Be Enclosed In Pathway. Provide Junction Boxes At Locations To Facilitate Transitioning Between Pathways. Pull Boxes Shall Also Be Provided As Required Per Routing As Per Specification.
3. Provide All Required Quantities Of Connector Housings, Cassettes, Terminations And Labeling Based On Cable Size Indicated For Each Location For A Complete Installation.

EQUIPMENT RACK DETAIL | Scale: NTS | Drawing: **G003** | Detail: **07**

ITEM	DATE	ISSUE DESCRIPTION	ITEM	DATE	ISSUE DESCRIPTION
1	09/18/19	ISSUED FOR BID			

30x42

dlb associates
CONSULTING ENGINEERS, P.C.
265 Industrial Way West, Eatontown, N.J. 07724
Questions For DLB Call: Anthony Laskosky
DLB Project ID: 47211 Phone: 732-927-5038

project: TCNJ - CAMPUS FIRE ALARM CABLE INFRASTRUCTURE UPGRADES 2000 PENNINGTON ROAD, EWING NJ, 08618

title: DETAILS

scale	drawn by	checked by	date
AS SHOWN	SC	SG	09/18/2019

dwg. no. G003

This Drawing Is The Property Of DLB Associates Consulting Engineers, PC. It Was Prepared Exclusively For This Particular Project And Is Limited To This Project Only. Unauthorized Reproduction Or Other Use Of These Drawings Or Ideas Is Prohibited.

Confidential and Proprietary / ©DLB Associates 2019

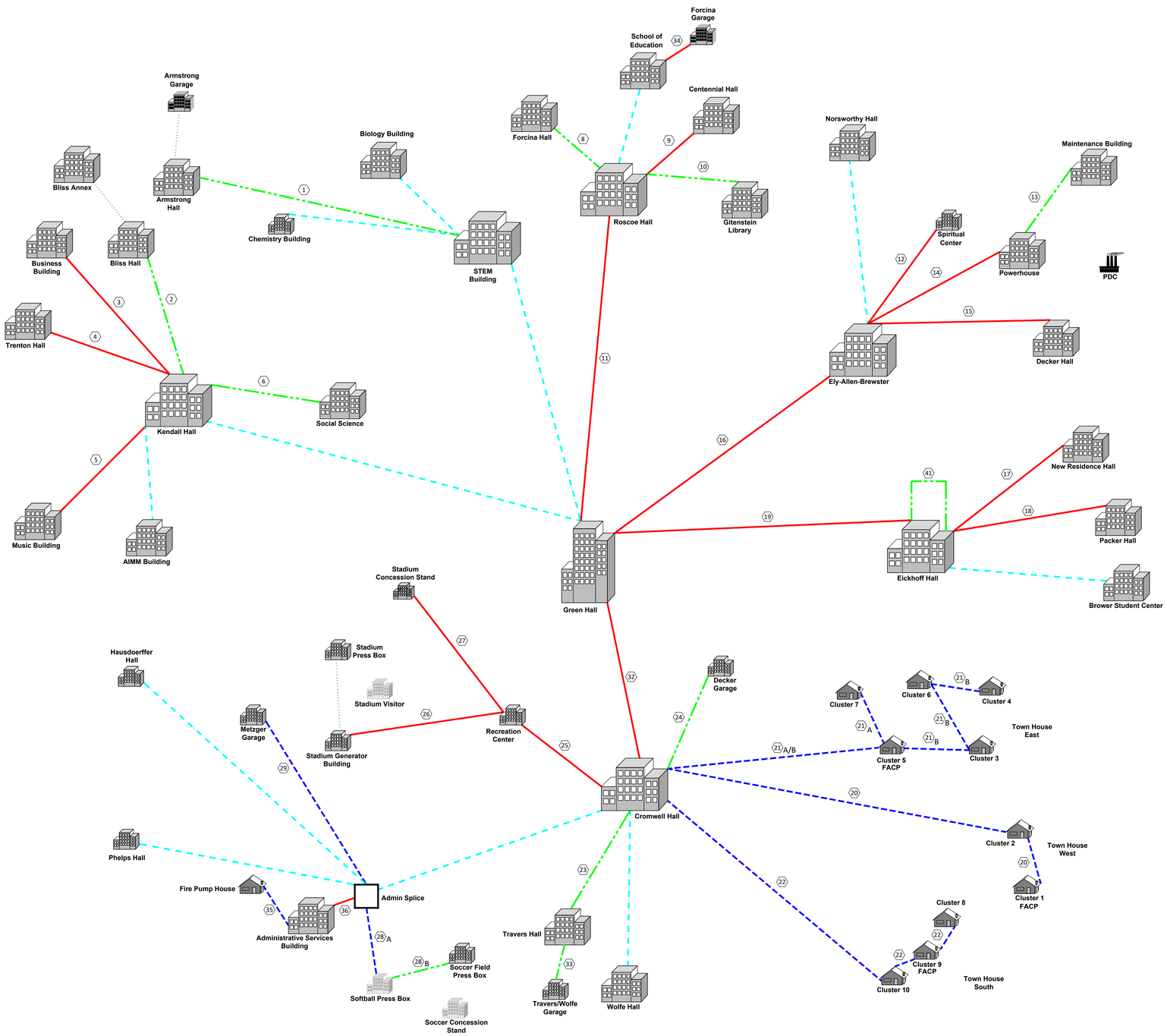

New Fiber Installation Shall Be Independent Of Existing Fire Alarm Network Cabling Which Shall Remain Intact And Operational For The Existent Of This Project.

Fiber Routing

Span ID	Starting Building	Ending Building	Empty Conduit	Hybrid Cable To Be Installed	
				Base Bid	Alternate #1
1	Armstrong Hall**	STEM Building	Yes	12/12	
2	Bliss Hall	Kendall Hall	Yes	12/12	48/48
3	Business Building	Kendall Hall	No	12/12	24/24
4	Trenton Hall	Kendall Hall	No	12/12	36/36
5	Music Building	Kendall Hall	No	12/12	24/24
	AIMM Building	Kendall Hall	N/A	0*	
6	Social Science	Kendall Hall	Yes	12/12	36/36
	Kendall Hall	Green Hall	Yes		144/144
	Chemestry Building	STEM Building	N/A	0*	
	Physics Building	STEM Building	N/A	0*	
	Biology Building	STEM Building	N/A	0*	
	STEM Building	Green Hall	N/A	0*	
8	Forcina Hall	Roscoe Hall	Yes	12/12	24/24
	Education Building	Roscoe Hall	N/A	0*	
9	Centennial Hall	Roscoe Hall	No	12/12	24/24
10	Gitenstein Library	Roscoe Hall	No	12/12	36/36
11	Roscoe Hall	Green Hall	No	12/12	96/96
	Norsworthy Hall	Ely-Allen-Brewster	N/A	0*	
12	Spiritual Center	Ely-Allen-Brewster	No	12/12	
13	Maintenance Building	Powerhouse	Yes	12/12	24/24
14	Powerhouse	Ely-Allen-Brewster	No	12/12	48/48
15	Decker Hall	Ely-Allen-Brewster	No	12/12	36/36
16	Ely-Allen-Brewster**	Green Hall	No	12/12	144/144
17	New Residence Hall	Eickhoff Hall	No	12/12	24/24
18	Packer Hall	Eickhoff Hall	No	12/12	36/36
	Brower Student Center	Eickhoff Hall	N/A	0*	
19	Eickhoff Hall	Green Hall	No	12/12	96/96
20	TH1 (Town House West)	Cromwell Hall	No	48/48	
21	TH5 21A/B (Town House East	Cromwell Hall	No	(2) 36/36	
22	TH9 (Town House South)	Cromwell Hall	No	48/48	
23	Travers Hall	Cromwell Hall	Yes	12/12	
	Wolfe Hall	Cromwell Hall	N/A	0*	
24	Decker Garage	Cromwell Hall	Yes	12/12	
25	Recreation Center	Cromwell Hall	No	12/12	36/36
26	Stadium Generator Building	Recreation Center	No	12/12	
27	Stadium Concession Stand	Recreation Center	No	12/12	
28	Soccer Field Press Box 28A/B	Admin Splice	No	24/24	36/36
29	Metzger Garage	Admin Splice	No	24/24	
	Phelps Hall	Admin Splice	N/A	0*	
	Hausdoerffer Hall	Admin Splice	N/A	0*	
32	Cromwell Hall	Green Hall	No	12/12	144/144
33	Travers/Wolfe Garage	Travers Hall	Yes	12/12	
34	Forcina Garage	Education Building	No	12/12	
35	Fire Pump House	Admin Services Building	No	12/12	
36	Admin Services Building	Admin Splice	N/A	36/36	
41	Eickhoff Room 227	Eickhoff Room 337	No	-	48/48

NOTES

1. * - Spare Capacity Is Available In Existing Fiber Located At The MDF For Fire Alarm.
2. ** - New Pathway For This Route Installed Under Domestic Water Project.
3. Contractor To Terminate All Fiber Strands On Both Ends Of Cable

GENERAL NOTES

1. All New Cables Shall Be Tested From MDF In One Building To MDF In Another.
2. All Existing Cables For This Project Shall Be Tested.

PARTIAL SYMBOLS & ABBREVIATIONS

Identifier	Description
	Existing Open Fiber Strands Available
	Existing Conduit Pathway Available For New Fiber Installation
	Remove Existing Fiber And Pull New Fiber Through Empty Conduit Pathway
	No Existing Fiber Available - New Duct Bank, Trenching, And New Fiber Required
	Fire Alarm Devices Fed From Panel Located In Another Building

ITEM	DATE	ISSUE DESCRIPTION	ITEM	DATE	ISSUE DESCRIPTION
1	09/18/19	ISSUED FOR BID			

30x42

dlb associates
CONSULTING ENGINEERS, P.C.
265 Industrial Way West, Eatontown, N.J. 07724
Questions For DLB Call: Anthony Laskosky
DLB Project ID: 47211 Phone: 732-927-5038

PAUL B. ESTILOW, P.E.
LIC. # 24GE03660300
Date: AUGUST 27, 2019

project
TCNJ - CAMPUS FIRE ALARM
CABLE INFRASTRUCTURE UPGRADES
2000 PENNINGTON ROAD,
EWING NJ, 08618

title
FIBER NETWORK OVERVIEW DIAGRAM

scale	drawn by	checked by	date
AS SHOWN	SC	SG	09/18/2019

dwg. no.
G004

This Drawing Is The Property Of DLB Associates Consulting Engineers, PC. It Was Prepared Exclusively For This Particular Project And Is Limited To This Project Only. Unauthorized Reproduction Or Other Use Of These Drawings Or Ideas Is Prohibited.

Confidential and Proprietary / ©DLB Associates 2019

	A	B	C	D	E	F	G	H	I	J	K	L	M	N	O	P	Q	R

UL/cUL SYSTEM NO. C-AJ-1184

METAL PIPE THROUGH CONCRETE FLOOR/WALL OR BLOCK WALL ASSEMBLY

F-RATING = 3-HR.
T-RATING = 0-HR.

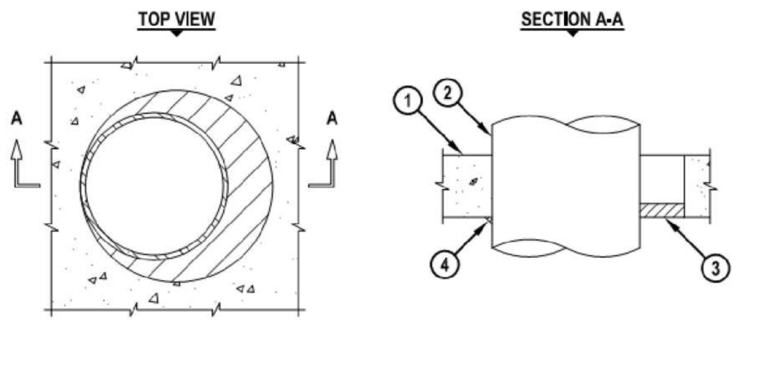

1. CONCRETE FLOOR OR WALL ASSEMBLY (3-HR FIRE-RATING) :
   A. LIGHTWEIGHT OR NORMAL WEIGHT CONCRETE FLOOR OR WALL (MINIMUM 4-1/2" THICK).
   B. PRECAST (HOLLOW-CORE) CONCRETE FLOOR (MINIMUM 7-1/2" THICK).
   C. ANY UL/cUL CLASSIFIED CONCRETE BLOCK WALL.
2. PENETRATING ITEM TO BE ONE OF THE FOLLOWING :
   A. MAXIMUM 10" NOMINAL DIAMETER STEEL PIPE (SCHEDULE 10 OR HEAVIER).
   B. MAXIMUM 10" NOMINAL DIAMETER CAST IRON PIPE.
   C. MAXIMUM 4" NOMINAL DIAMETER COPPER PIPE.
   D. MAXIMUM 4" NOMINAL DIAMETER EMT OR STEEL CONDUIT.
3. MINIMUM 1" DEPTH HILTI FS-ONE MAX INTUMESCENT FIRESTOP SEALANT FLUSH WITH TOP OR BOTTOM OF FLOOR. (SEE NOTE NO. 3 BELOW).
4. MINIMUM 1/2" CROWN HILTI FS-ONE MAX INTUMESCENT FIRESTOP SEALANT APPLIED AT POINT OF CONTACT.

NOTES : 1. MAXIMUM DIAMETER OF OPENING = 14" FOR NORMAL CONCRETE, 7" FOR PRECAST (HOLLOW CORE) CONCRETE.
2. ANNULAR SPACE = MINIMUM 0", MAXIMUM 3-1/4".
3. MINIMUM 1" DEPTH HILTI FS-ONE MAX INTUMESCENT FIRESTOP SEALANT IS REQUIRED ON BOTH ON BOTH SIDES OF A WALL ASSEMBLY.
4. WHEN PRECAST (HOLLW-CORE) UNITS ARE USED, HILTI FS-ONE MAX INTUMESCENT FIRESTOP SEALANT SHALL BE INSTALLED FLUSH WITH LOWER SURFACE OF FLOOR.
5. MINERAL WOOL MAY BE USED AS A BACKER FOR PROPER INSTALLATION OF FIRESTOP SEALANT.

CONCRETE PIPE THROUGH FLOOR / WALL	Scale: NTS	Drawing: **G005** Detail: **01**

UL/cUL SYSTEM NO. C-AJ-1226

METAL PIPE THROUGH CONCRETE FLOOR/WALL OR BLOCK WALL

F-RATING = 3-HR.
T-RATING = 0-HR.
L-RATING AT AMBIENT = LESS THAN 1 CFM / SQ FT
L-RATING AT 400° F = 4 CFM / SQ FT

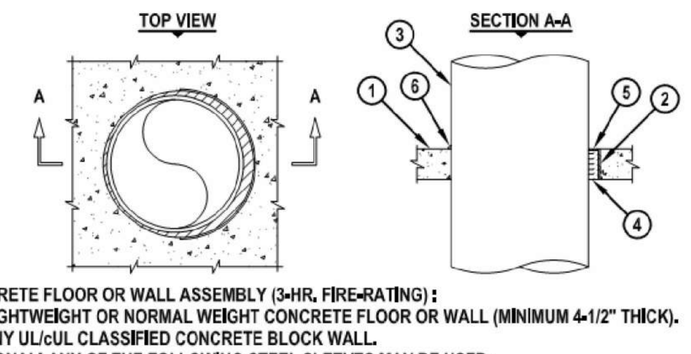

1. CONCRETE FLOOR OR WALL ASSEMBLY (3-HR. FIRE-RATING) :
   A. LIGHTWEIGHT OR NORMAL WEIGHT CONCRETE FLOOR OR WALL (MINIMUM 4-1/2" THICK).
   B. ANY UL/cUL CLASSIFIED CONCRETE BLOCK WALL.
2. [OPTIONAL] ANY OF THE FOLLOWING STEEL SLEEVES MAY BE USED :
   A. MAXIMUM 32" NOMINAL DIAMETER STEEL PIPE SLEEVE (SCHEDULE 40 OR HEAVIER) MAY EXTEND MAXIMUM 3" ABOVE FLOOR OR BEYOND BOTH SURFACES OF WALL.
   B. MAXIMUM 6" (MIN. 26 GA.) OR 12" (MIN. 24 GA.) DIAMETER GALVANIZED STEEL SLEEVE WITH SQUARE FLANGE SPOT WELDED TO BOTTOM OR MID-HEIGHT OF SLEEVE AND SIZED MINIMUM 2" LARGER THAN SLEEVE DIAMETER. SLEEVE MAY EXTEND MAXIMUM 1" ABOVE TOP SURFACE OF FLOOR, AND MAXIMUM 4" BELOW BOTTOM SURFACE OF FLOOR.
3. PENETRATING ITEM TO BE ONE OF THE FOLLOWING :
   A. MAXIMUM 30" NOMINAL DIAMETER STEEL PIPE (SCHEDULE 10 OR HEAVIER).
   B. MAXIMUM 30" NOMINAL DIAMETER CAST IRON PIPE.
   C. MAXIMUM 6" NOMINAL DIAMETER COPPER PIPE.
   D. MAXIMUM 6" NOMINAL DIAMETER STEEL CONDUIT.
   E. MAXIMUM 4" NOMINAL DIAMETER EMT.
4. MINIMUM 4" THICKNESS MINERAL WOOL (MINIMUM 4 PCF DENSITY) TIGHTLY PACKED AND RECESSED TO ACCOMMODATE FIRESTOP SEALANT.
5. MINIMUM 1/4" DEPTH HILTI FS-ONE MAX INTUMESCENT FIRESTOP SEALANT FLUSH WITH TOP SURFACE OF PIPE SLEEVE OR FLOOR ASSEMBLY.
6. MINIMUM 1/4" BEAD HILTI FS-ONE MAX INTUMESCENT FIRESTOP SEALANT APPLIED AT POINT OF CONTACT.

NOTES : 1. MAXIMUM DIAMETER OF OPENING = 32".
2. ANNULAR SPACE = MINIMUM 0", MAXIMUM 1-7/8".
3. MINIMUM 1/4" DEPTH HILTI FS-ONE MAX INTUMESCENT FIRESTOP SEALANT IS REQUIRED ON BOTH SIDES OF A WALL ASSEMBLY.
4. PIPE MAY BE INSTALLED WITH CONTINUOUS POINT OF CONTACT.

METAL PIPE THROUGH CONCRETE FLOOR / WALL	Scale: NTS	Drawing: **G005** Detail: **02**

UL/cUL SYSTEM NO. C-AJ-1421

METAL PIPE IN A SLEEVE THROUGH CONCRETE FLOOR/WALL OR BLOCK WALL

F-RATING = 2-HR. OR 3-HR.
T-RATING = 0-HR.
L-RATING AT AMBIENT = LESS THAN 1 CFM / SQ FT
L-RATING AT 400° F = LESS THAN 1 CFM / SQ FT

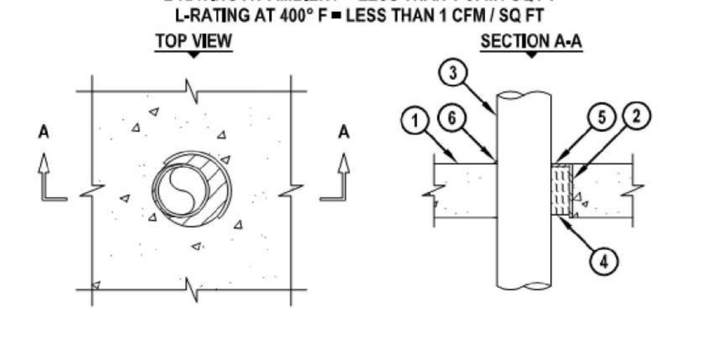

1. CONCRETE FLOOR OR WALL ASSEMBLY (2-HR. OR 3-HR. FIRE-RATING) :
   A. LIGHTWEIGHT OR NORMAL WEIGHT CONCRETE FLOOR OR WALL (MINIMUM 4-1/2" THICK).
   B. ANY UL/cUL CLASSIFIED CONCRETE BLOCK WALL.
2. [OPTIONAL] MAXIMUM 6" DIAMETER STEEL PIPE SLEEVE (SCHEDULE 40 OR HEAVIER).
3. PENETRATING ITEM TO BE ONE OF THE FOLLOWING :
   A. MAXIMUM 4" DIAMETER STEEL PIPE (SCHEDULE 10 OR HEAVIER).
   B. MAXIMUM 4" DIAMETER CAST IRON PIPE.
   C. MAXIMUM 4" NOMINAL DIAMETER COPPER PIPE.
   D. MAXIMUM 4" NOMINAL DIAMETER STEEL CONDUIT OR EMT.
4. MINIMUM 4" THICKNESS MINERAL WOOL (MIN. 4 PCF DENSITY) TIGHTLY PACKED.
5. MINIMUM 1/4" DEPTH HILTI FS-ONE MAX INTUMESCENT FIRESTOP SEALANT, HILTI CFS-S SIL GG FIRESTOP SILICONE SEALANT, OR HILTI CFS-S SIL SL FIRESTOP SILICONE SEALANT (FLOOR ONLY).
6. MINIMUM 1/4" BEAD HILTI FS-ONE MAX INTUMESCENT FIRESTOP SEALANT OR HILTI CFS-S SIL GG FIRESTOP SILICONE SEALANT APPLIED AT POINT OF CONTACT (NOT REQUIRED WHEN OR HILTI CFS-S SIL SL FIRESTOP SILICONE SEALANT IS USED, ITEM NO. 5).

NOTES : 1. MAXIMUM DIAMETER OF OPENING = 6".
2. ANNULAR SPACE = MINIMUM 0", MAXIMUM 5-3/8".
3. MINIMUM 1/4" DEPTH HILTI FS-ONE MAX INTUMESCENT FIRESTOP SEALANT OR HILTI CFS-S SIL GG FIRESTOP SILICONE SEALANT IS REQUIRED ON BOTH SIDES OF A WALL ASSEMBLY.
4. F-RATING IS 3-HR. WHEN HILTI FS-ONE MAX INTUMESCENT FIRESTOP SEALANT IS USED, AND 2-HR. WHEN HILTI CFS-S SIL GG FIRESTOP SILICONE SEALANT, OR HILTI CFS-S SIL SL FIRESTOP SILICONE SEALANT IS USED.

METAL PIPE IN A SLEEVE THROUGH CONCRETE FLOOR / WALL OR BLOCK WALL	Scale: NTS	Drawing: **G005** Detail: **03**

UL/cUL SYSTEM NO. F-A-1105

METAL PIPE THROUGH CONCRETE FLOOR ASSEMBLY

F-RATING = 2-HR.
T-RATING = 2-HR.
L-RATING AT AMBIENT = LESS THAN 1 CFM / SQ FT
L-RATING AT 400°F = 4 CFM / SQ FT
W-RATING = CLASS I (SEE NOTE NO. 4 BELOW)

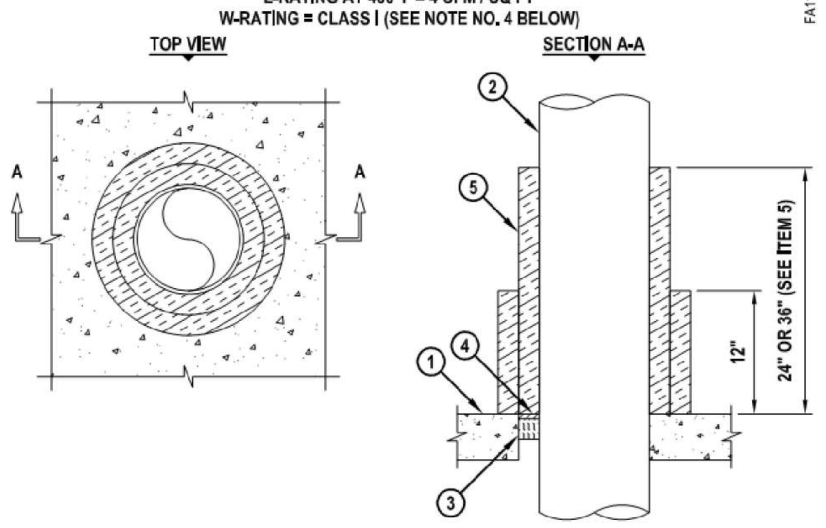

METAL PIPE THROUGH CONCRETE FLOOR ASSEMBLY	Scale: NTS	Drawing: **G005** Detail: **04**

UL/cUL SYSTEM NO. W-L-1054

METAL PIPE THROUGH GYPSUM WALL ASSEMBLY

F-RATING = 1-HR. OR 2-HR.
T-RATING = 0-HR.
L-RATING AT AMBIENT = LESS THAN 1 CFM / SQ FT
L-RATING AT 400°F = LESS THAN 1 CFM / SQ FT

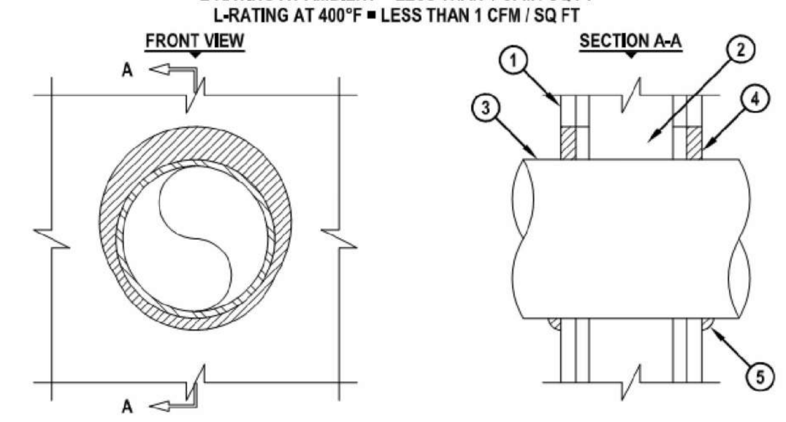

1. GYPSUM WALL ASSEMBLY (UL/cUL CLASSIFIED U300 OR U400 SERIES) (1-HR. OR 2-HR. FIRE-RATING) (2-HR. SHOWN).
2. [NOT SHOWN] WOOD STUDS TO CONSIST OF NOMINAL 2" x 4" LUMBER. STEEL STUDS TO BE MINIMUM 2-1/2" WIDE.
3. PENETRATING ITEM TO BE ONE OF THE FOLLOWING :
   A. MAXIMUM 30" DIAMETER STEEL PIPE (SCHEDULE 10 OR HEAVIER).
   B. MAXIMUM 30" DIAMETER CAST IRON PIPE.
   C. MAXIMUM 6" NOMINAL DIAMETER COPPER PIPE.
   D. MAXIMUM 6" NOMINAL DIAMETER STEEL CONDUIT.
   E. MAXIMUM 4" NOMINAL DIAMETER EMT.
4. MINIMUM 5/8" DEPTH HILTI FS-ONE MAX INTUMESCENT FIRESTOP SEALANT.
5. MINIMUM 1/2" BEAD HILTI FS-ONE MAX INTUMESCENT FIRESTOP SEALANT APPLIED AT POINT OF CONTACT.

NOTES : 1. MAXIMUM DIAMETER OF OPENING :
A. 32-1/4" FOR STEEL STUD WALLS.
B. 14-1/2" FOR WOOD STUD WALLS.
2. ANNULAR SPACE = MINIMUM 0", MAXIMUM 2-1/4".
3. PIPE MAY BE INSTALLED WITH CONTINUOUS POINT OF CONTACT.

METAL PIPE THROUGH GYPSUM WALL ASSEMBLY	Scale: NTS	Drawing: **G005** Detail: **05**

UL/cUL SYSTEM NO. F-A-1128

METAL PIPE THROUGH CONCRETE FLOOR ASSEMBLY

F-RATING = 2-HR. OR 3-HR.
T-RATING = 0-HR. OR 1/4-HR.
L-RATING AT AMBIENT = LESS THAN 1 CFM/SQ. FT. (SEE NOTE BELOW)
L-RATING AT 400°F = LESS THAN 1 CFM/SQ. FT. (SEE NOTE BELOW)
W-RATING = CLASS I (SEE NOTE BELOW)

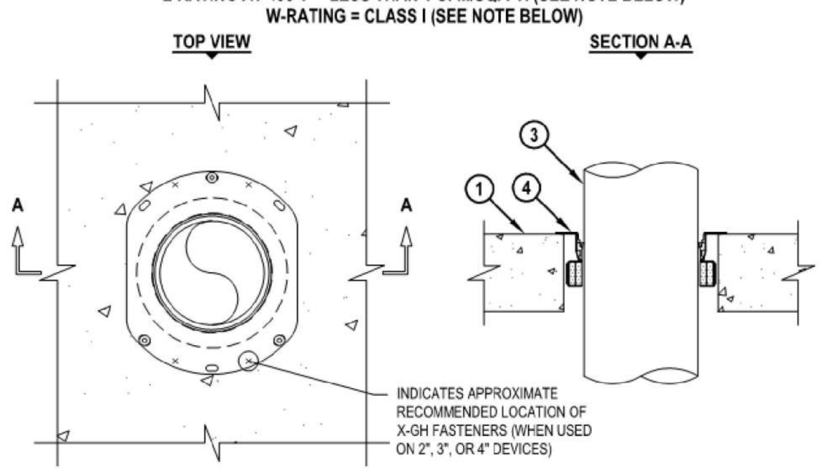

1. CONCRETE FLOOR ASSEMBLY (2-HR. OR 3-HR. FIRE-RATING) :
   A. LIGHTWEIGHT OR NORMAL WEIGHT CONCRETE FLOOR (MINIMUM 2-1/2" TO 8" THICK).
   B. STEEL FLOOR UNIT/FLOOR ASSEMBLY - LIGHTWEIGHT OR NORMAL WEIGHT CONCRETE FLOOR (MINIMUM 2-1/2" TO 8" THICK) OVER METAL DECKING (UL CLASSIFIED D700, D800, OR D900 SERIES).
2. [OPTIONAL - NOT SHOWN] ANY OF THE FOLLOWING SLEEVES MAY BE USED :
   A. NOMINAL 4", 5", OR 6" DIAMETER STEEL PIPE SLEEVE (SCHEDULE 10 OR HEAVIER) CAST OR GROUTED INTO FLOOR ASSEMBLY, FLUSH WITH FLOOR SURFACES.
   B. NOMINAL 4", 5", 6", OR 9" DIAMETER GALVANIZED STEEL SLEEVE (MIN. 26 GA.) WITH SQUARE FLANGE SPOT WELDED TO BOTTOM OR MID-HEIGHT OF SLEEVE AND SIZED MINIMUM 2" LARGER THAN SLEEVE DIAMETER. SLEEVE IS TO BE CAST IN PLACE, AND MAY EXTEND A MAXIMUM 4" BELOW BOTTOM SURFACE OF FLOOR AND SIT FLUSH WITH TOP SURFACE OF FLOOR.

METAL PIPE THROUGH CONCRETE FLOOR ASSEMBLY	Scale: NTS	Drawing: **G005** Detail: **06**

UL/cUL SYSTEM NO. F-C-1059

METAL PIPE THROUGH WOOD FLOOR/CEILING ASSEMBLY

F-RATING = 1-HR. OR 2-HR.
T-RATING = 0-HR. OR 1/2-HR.

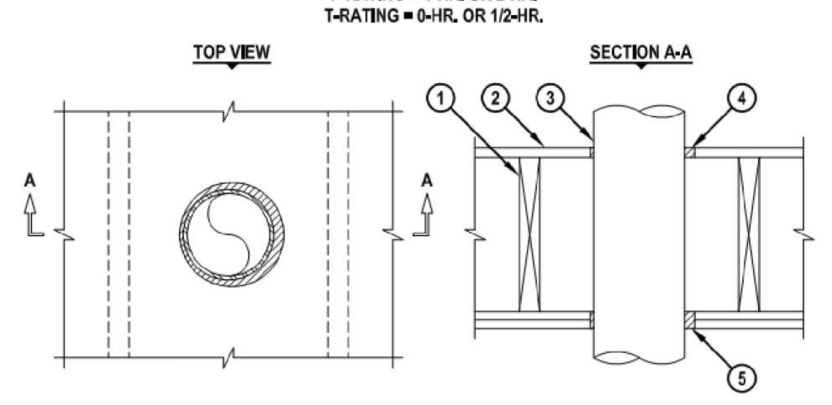

1. WOOD FLOOR/CEILING ASSEMBLY (UL/cUL CLASSIFIED L500 SERIES) (1-HR. OR 2-HR. FIRE-RATING) (2-HR. SHOWN).
2. LUMBER OR PLYWOOD SUBFLOOR WITH FINISH FLOOR OF LUMBER, PLYWOOD, OR FLOOR TOPPING MIXTURE.
3. PENETRATING ITEM TO BE ONE OF THE FOLLOWING :
   A. MAXIMUM 6" NOMINAL DIAMETER STEEL PIPE (SCHEDULE 40 OR HEAVIER).
   B. MAXIMUM 6" NOMINAL DIAMETER CAST IRON PIPE.
   C. MAXIMUM 6" NOMINAL DIAMETER STEEL CONDUIT.
   D. MAXIMUM 4" NOMINAL DIAMETER EMT.
   E. MAXIMUM 2" NOMINAL DIAMETER FLEXIBLE STEEL CONDUIT.
4. MINIMUM 3/4" DEPTH HILTI FS-ONE MAX OR FS-ONE INTUMESCENT FIRESTOP SEALANT FLUSH WITH TOP SURFACE OF SUBFLOOR OR SOLE PLATE.
5. HILTI FS-ONE MAX OR FS-ONE INTUMESCENT FIRESTOP SEALANT FLUSH WITH BOTTOM SURFACE OF CEILING OR LOWER TOP PLATE :
   A. MINIMUM 5/8" DEPTH OF SEALANT FOR A 1-HR. FIRE-RATING.
   B. MINIMUM 1-1/4" DEPTH OF SEALANT FOR A 2-HR. FIRE-RATING.

NOTES : 1. MAXIMUM DIAMETER OF OPENING = 7-5/8".
2. ANNULAR SPACE = MINIMUM 1/4", MAXIMUM 3/4".
3. CHASE WALL (NOT SHOWN, OPTIONAL) - THE THROUGH PENETRANT MAY BE ROUTED THROUGH A 1-HR. OR 2-HR. FIRE-RATED GYPSUM CHASE WALL ASSEMBLY.

METAL PIPE THROUGH WOOD FLOOR / CEILING	Scale: NTS	Drawing: **G005** Detail: **07**

SCHEDULE OF FIREPROOFING OF WALL & FLOOR / CEILING PENETRATIONS

Location	Penetrated Item	Fire Resistance Rating in Hours (min.)	Penetrating Item	Applicable UL System Detail(s)
Wall	Metal Stud and Drywall	2	1" - 4" Metal (EMT)	W-L-1054; W-L-1441
Wall	Wood Stud and Drywall	2	1" - 4" Metal (EMT)	W-L-1054; W-L-1441
Wall	Brick Masonry	2	1" - 4" Metal (EMT)	C-AJ-1184; C-AJ-1226; C-AJ-1421
Wall	CMU	2	1" - 4" Metal (EMT)	C-AJ-1184: C-AJ-1226; C-AJ-1421
Wall	Concrete	2	1" - 4" Metal (EMT)	C-AJ-1184: C-AJ-1226; C-AJ-1421
Floor / Ceiling	Wood Floor	2	1" - 4" Metal (EMT)	F-C-1059
Floor / Ceiling	Concrete Floor	2	1" - 4" Metal (EMT)	C-AJ-1184: C-AJ-1226; F-A-1105; F-A-1128; C-AJ-1421

NOTES:

1. The details listed above are for typical construction assemblies expected to be encountered on this project. They are provided for the contractor's information and may not represent all construction assemblies that will be penetrated. It is the contractor's responsibility to apply the appropriate detail to each penetration.
2. Where multiple applicable details are shown the contractor may select one based upon the existing conditions, constructability and product availability.
3. While some penetrations may not be through fire walls, in the interest of life safety and simplification of construction, all penetrations are to be firestopped as if the wall had a two hour fire-resistance rating. If during construction the contractor encounters a three hour fire-resistance rated wall and the applicable details do not offer a three hour rated option, notify the Engineer immediately for resolution.
4. The contractor is responsible for the conduit pathway routing and will identify walls, floors and ceilings to be penetrated prior to the ordering of materials. The contractor is to provide proposed conduit path drawings (may be hand-marked) for each building and system for Engineer review and approval prior to beginning the work. All penetrations are at the discretion of the contractor in the field and will be accounted for in the contractor's bid. There will be no change orders issued for number or type of penetrations to be created and firestopped.
5. The applicable details listed here and included in the drawings are based upon the use of Hilti products. The contractor is to use a single source for fireproofing materials. The same listed detail may be used from an alternate approved manufacturer at the contractor's request prior to beginning the work.

PENETRATION FIRESTOPPING GENERAL NOTES

1. Firestopping: Material or combination of materials used to retain integrity of fire-rated construction by maintaining an effective barrier against the spread of flame, smoke, and hot gases through penetrations in joints between fire rated wall and floor assemblies.
2. Only tested firestop systems shall be used in specific locations as follows: Penetrations for the passage of conduit through fire-rated vertical barriers (walls and partitions), and horizontal barriers (floor/ceiling assemblies).
3. Test Requirements: ASTM E-814-02, "Standard Method of Fire Tests of Through Penetration Fire Stops"; Underwriters Laboratories (UL) of Northbrook, IL runs ASTM E-814 under their designation of UL 1479 and publishes the results in their "FIRE RESISTANCE DIRECTORY" that is updated annually.
4. A manufacturer's direct representative (not distributor or agent) to be on-site during initial installation of firestop systems to train appropriate contractor personnel in proper selection and installation procedures. This will be done per manufacturer's written recommendations published in their literature and drawing details.
5. Firestop System installation must meet requirements of ASTM E-814, UL 1479 or UL 2079 tested assemblies that provide a fire rating equal to that of construction being penetrated.
6. Proposed firestop materials and methods shall conform to applicable governing codes having local jurisdiction.
7. For those firestop applications that exist for which no UL tested system is available through a manufacturer, an engineering judgment derived from similar UL system designs or other tests will be submitted to local authorities having jurisdiction for their review and approval prior to installation. Engineer judgment drawings must follow requirements set forth by the International Firestop Council (September 7, 1994, as may be amended from time to time).
8. REQUIRED SUBMITTALS
   - 8.1. Shop Drawings: Proposed conduit routes per building with each penetration identified.
   - 8.2. Product Data: Manufacturer's specifications and technical data for each material including the composition and limitations, documentation of UL firestop systems to be used and manufacturer's installation instructions to comply with Section 1300.
   - 8.3. Manufacturer's engineering judgment identification number and drawing details when no UL system is available for an application. Engineer judgment must include both project name and contractor's name who will install firestop system as described in drawing.
   - 8.4. Submit material safety data sheets provided with product delivered to job-site.
9. INSTALLER QUALIFICATIONS: Engage an experienced Installer who is certified, licensed, or otherwise qualified by the firestopping manufacturer as having been provided the necessary training to install manufacturer's products per specified requirements. A supplier's willingness to sell its firestopping products to the Contractor or to an Installer engaged by the Contractor does not in itself confer qualification on the buyer.
10. DELIVERY, STORAGE, AND HANDLING
    - 10.1. Deliver materials undamaged in manufacturer's clearly labeled, unopened containers, identified with brand, type, and UL label where applicable.
    - 10.2. Coordinate delivery of materials with scheduled installation date to allow minimum storage time at job-site.
    - 10.3. Store materials under cover and protect from weather and damage in compliance with manufacturer's requirements, including temperature restrictions.
    - 10.4. Comply with recommended procedures, precautions or remedies described in material safety data sheets as applicable.
    - 10.5. Do not use damaged or expired materials.
11. PROJECT CONDITIONS
    - 11.1. Do not use materials that contain flammable solvents.
    - 11.2. Schedule installation of firestopping after completion of penetrating item installation but prior to covering or concealing of openings.
    - 11.3. Verify existing conditions and substrates before starting work. Correct unsatisfactory conditions before proceeding.
    - 11.4. Weather conditions: Do not proceed with installation of firestop materials when temperatures exceed the manufacturer's recommended limitations for installation printed on product label and product data sheet.
    - 11.5. During installation, provide masking and drop cloths to prevent firestopping materials from contaminating any adjacent surfaces.
12. Provide firestopping composed of components that are compatible with each other, the substrates forming openings, and the items, if any, penetrating the firestopping under conditions of service and application, as demonstrated by the firestopping manufacturer based on testing and field experience.
13. Provide components for each firestopping system that are needed to install fill material. Use only components specified by the firestopping manufacturer and approved by the qualified testing agency for the designated fire-resistance-rated systems.
14. MATERIALS
    - 14.1. Use only firestop products that have been UL 1479, ASTM E-814, or UL 2079 tested for specific fire-rated construction conditions conforming to construction assembly type, penetrating item type, annular space requirements, and fire-rating involved for each separate instance.
    - 14.2. Provide a firestop system with a "F" Rating as determined by UL 1479 or ASTM E814 which is equal to the time rating of construction being penetrated.
    - 14.3. Provide a firestop system with an Assembly Rating as determined by UL 2079 which is equal to the time rating of construction being penetrated.
15. PREPARATION
    - 15.1. Verification of Conditions: Prior to beginning the work, examine areas and conditions under which work is to be performed and identify conditions detrimental to proper or timely completion.
    - 15.2. Verify penetrations are properly sized and in suitable condition for application of materials.
    - 15.3. Surfaces to which firestop materials will be applied shall be free of dirt, grease, oil, rust, laitance, release agents, water repellents, and any other substances that may affect proper adhesion.
    - 15.4. Provide masking and temporary covering to prevent soiling of adjacent surfaces by firestopping materials.
    - 15.5. Comply with manufacturer's recommendations for temperature and humidity conditions before, during and after installation of firestopping.
    - 15.6. Do not proceed until unsatisfactory conditions have been corrected.
16. INSTALLATION
    - 16.1. Regulatory Requirements: Install firestop materials in accordance with UL Fire Resistance Directory or Omega Point Laboratories Directory.
    - 16.2. Manufacturer's Instructions: Comply with manufacturer's instructions for installation of through-penetration and construction joint materials.
      - 16.2.1. Seal all holes or voids made by penetrations to ensure an air and water resistant seal.
      - 16.2.2. Protect materials from damage on surfaces subjected to traffic.
17. FIELD QUALITY CONTROL
    - 17.1. Examine sealed penetration areas to ensure proper installation before concealing or enclosing areas.
    - 17.2. Keep areas of work accessible until inspection by applicable code authorities.
    - 17.3. Inspection of through-penetration firestopping shall be performed in accordance with ASTM E 2174, “Standard Practice for On-Site Inspection of Installed Fire Stops” or other recognized standard.
    - 17.4. Perform under this section patching and repairing of firestopping caused by cutting or penetrating of existing firestop systems already installed by other trades.
18. ADJUSTING AND CLEANING
    - 18.1. Remove equipment, materials and debris, leaving area in undamaged, clean condition.
    - 18.2. Clean all surfaces adjacent to sealed holes and joints to be free of excess firestop materials and soiling as work progresses.

This Drawing Is The Property Of DLB Associates Consulting Engineers, PC. It Was Prepared Exclusively For This Particular Project And Is Limited To This Project Only. Unauthorized Reproduction Or Other Use Of These Drawings Or Ideas Is Prohibited.

30x42

ITEM	DATE	ISSUE DESCRIPTION	ITEM	DATE	ISSUE DESCRIPTION
4					
3					
2					
1	09/18/19	ISSUED FOR BID			

dlb associates
CONSULTING ENGINEERS, P.C.
265 Industrial Way West, Eatontown, N.J. 07724
Questions For DLB Call: **Anthony Laskosky**
DLB Project ID: 47211 Phone: 732-927-5038

PAUL B. ESTILOW, P.E.
LIC. # 24GE03660300
Date: AUGUST 27, 2019

project
TCNJ - CAMPUS FIRE ALARM
CABLE INFRASTRUCTURE UPGRADES
2000 PENNINGTON ROAD,
EWING NJ, 08618

title
FIREPROOFING GENERAL SCOPE AND DETAILS

scale	drawn by	checked by	date
AS SHOWN	CDO	AL	09/18/2019

dwg. no.
G005

Last Saved: N:\47\472\47211 - TCNJ Campus Fire Alarm\010 Cable Infrastructure Upgrade\47211 - 00 - G005.dwg, 7/24/19 at 5:25 PM By HFLORES - Last Printed: 10/4/19 at 7:55 AM By Gowers, Scot

Confidential and Proprietary / ©DLB Associates 2019

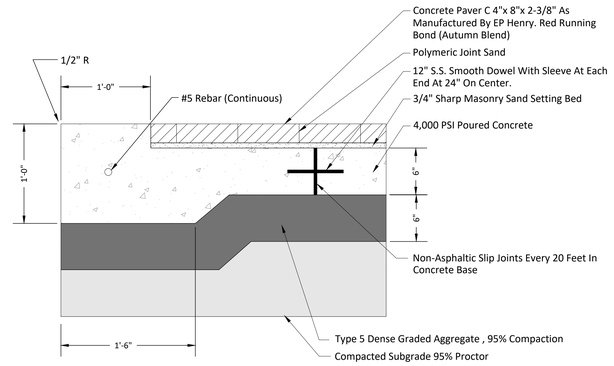

ELEVATION

SIDEWALK WITH EMBEDDED PAVER REPAIR DETAIL | Scale: NTS | Drawing: **G006** | Detail: **01**

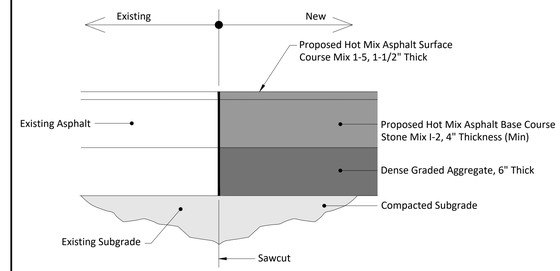

NOTES:
1. Excavate And Replace To Fill Depth Pavement Where Necessary.
2. Spray All Concrete With Approved Curing Compound.
3. All Radii Shall Be Formed To A Smooth, Even Radius. No Segments Will Be Accepted.
4. Areas Where Proposed Curb Is To Butt To Existing Curb, Last 10' Section Shall Be Transition Piece For Height And Width.
5. Curbs Shall Be 4000 PSI Concrete, Formed In 10' Sections With 1/2" Cork Expansion Joints And Approved Sealer At 30' On Center. Stone Rub Exposed Surfaces To A Smooth, Even Finish. Joint At Start And End Of All Curves And All Changes Of Direction. All Material And Installation Shall Conform To NJ DOT Spec 1989.
6. Where Applicable, Roadway Striping Should Be Included To Fully Restore Roadways And Drive Isles To Existing Conditions.

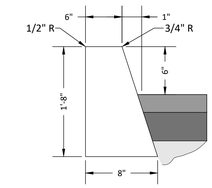

CURB

PAVEMENT REPAIR WITH EXISTING PAVEMENT | Scale: NTS | Drawing: **G006** | Detail: **02**

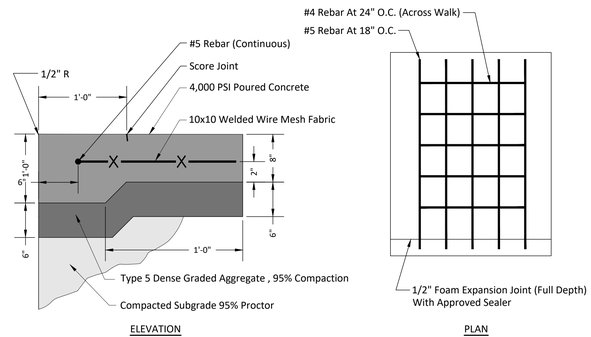

ELEVATION PLAN

NOTES:
1. Sidewalk Width Match Existing. Replace Length Joint To Joint.
2. Form Outside Edges And Joints With 1/2" Radius Edging Tool.
3. Form Transverse Dummy Joints At 5 Foot Intervals. Approximately 1/8" Wide And At Least 1" Deep.
4. When Butting Into Existing Concrete, Saw Cut Concrete And Use 1/2" Premolded Expansion Filler Full Depth Of Sidewalk.
5. Expansion Joint 20' Max. Spacing. Seal Joints With Approved Caulking Material.
6. Protect Wet / New Concrete From Freezing.
7. Whenever Possible, Sidewalk Surface Should Be Sloped From Back To Front At 1/4" Per Foot To Drain Towards Street.
8. Brick Banding Shall Be Provided In The Same Pattern As Existing. Pavers Shall Be EP Henry Autumn Blend.
9. Use PVC Pipe Embedded At Least 12" Into Previous Concrete Pour With Rebar Throughout To Next Section Of Sidewalk To Be Placed (To Provide Proper Slip Condition At Expansion Joint).

DRIVE ISLE SIDEWALK RESTORATION DETAIL | Scale: NTS | Drawing: **G006** | Detail: **03**

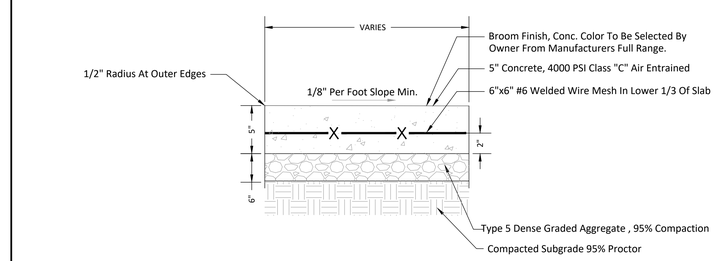

NON-DRIVE ISLE SIDEWALK REPAIR DETAIL | Scale: NTS | Drawing: **G006** | Detail: **04**

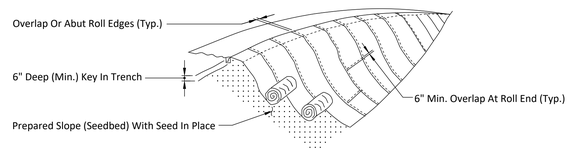

NOTES:
1. Use Temporary Soil Stabilization Matting Made Of Degradable (Lasts 6 Months Minimum) Natural Or Man-made Fibers (Mostly Organic). Mat Must Have Uniform Thickness And Distribution Of Fibers Throughout And Be Smolder Resistant. Chemicals Used In The Mat Must Be Non-leaching And Non-toxic To Vegetation And Seed Germination And Non-Injurious To The Skin. If Present, Netting Must Be Extruded Plastic With A Maximum Mesh Opening Of 2x2 Inches And Sufficiently Bonded Or Sewn On 2 Inch Centers Along Longitudinal Axis Of The Material To Prevent Separation Of The Net From The Parent Material.
2. Secure Matting Using Steel Staples, Wood Stakes, Or Biodegradable Equivalent. Staples Must Be "u" Or "t" Shaped Steel Wire Having A Minimum Gauge Of No. 11 And No. 8 Respectively. "U" Shaped Staples Must Average 1 To 1-1/2 Inches Wide And Be A Minimum Of 6 Inches Long. "T" Shaped Staples Must Have A Minimum 8 Inch Main Leg, A Minimum 1 Inch Secondary Leg, And A Minimum 4 Inch Head. Wood Stakes Must Be Rough-Sawn Hardwood, 12 To 24 Inches In Length, 1x3 Inch In Cross Section, And Wedge Shaped At The Bottom.
3. Perform Final Grading, Topsoil Application, Seedbed Preparation, And Permanent Seeding In Accordance With Specifications. Place Matting Within 48 Hours Of Completing Seeding Operations Unless End Of Workday Stabilization Is Specified On The Approved Erosion & Sediment Control Plan.
4. Unroll Matting Downslope. Lay Mat Smoothly And Firmly Upon The Seeded Surface. Avoid Stretching The Matting.
5. Overlap Or Abut Roll Edges Per Manufacturer Recommendations. Overlap Roll Ends By 6 Inches (Minimum), With The Upslope Mat Overlapping On Top Of The Downslope Mat.
6. Key In The Upslope End Of Mat 6 Inches (Minimum) By Digging A Trench, Placing The Matting Roll End In The Trench, Stapling The Mat In Place, Replacing The Excavated Material, And Tamping To Secure The Mat End In The Key.
7. Staple / Stake Mat In A Staggered Pattern On 4 Foot (maximum) Centers Throughout And 2 Foot (Maximum) Centers Along Seams, Joints, And Roll Ends.
8. Establish And Maintain Vegetation So That Requirements For Adequate Vegetative Establishment Are Continuously Met In Accordance With Vegetative Stabilization.

SLOPE STABILIZATION DETAIL | Scale: NTS | Drawing: **G006** | Detail: **05**

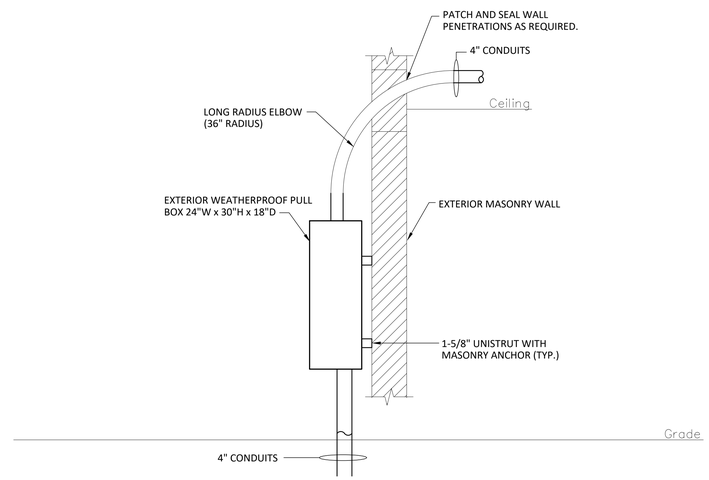

EXTERIOR PULL BOX DETAIL | Scale: NTS | Drawing: **G006** | Detail: **06**

ITEM	DATE	ISSUE DESCRIPTION	ITEM	DATE	ISSUE DESCRIPTION
4					
3					
2					
1	09/18/19	ISSUED FOR BID			

30x42

dlb associates
CONSULTING ENGINEERS, P.C.
265 Industrial Way West, Eatontown, N.J. 07724
Questions For DLB Call: **Anthony Laskosky**
DLB Project ID: 47211 Phone: 732-927-5038

PAUL B. ESTILOW, P.E.
LIC. # 24GE03660300
Date: AUGUST 27, 2019

project: TCNJ - CAMPUS FIRE ALARM CABLE INFRASTRUCTURE UPGRADES 2000 PENNINGTON ROAD, EWING NJ, 08618

title: DETAILS

scale	drawn by	checked by	date
AS SHOWN	HF	ASL	09/18/2019

dwg. no. G006

This Drawing Is The Property Of DLB Associates Consulting Engineers, PC. It Was Prepared Exclusively For This Particular Project And Is Limited To This Project Only. Unauthorized Reproduction Or Other Use Of These Drawings Or Ideas Is Prohibited.

Confidential and Proprietary / ©DLB Associates 2019

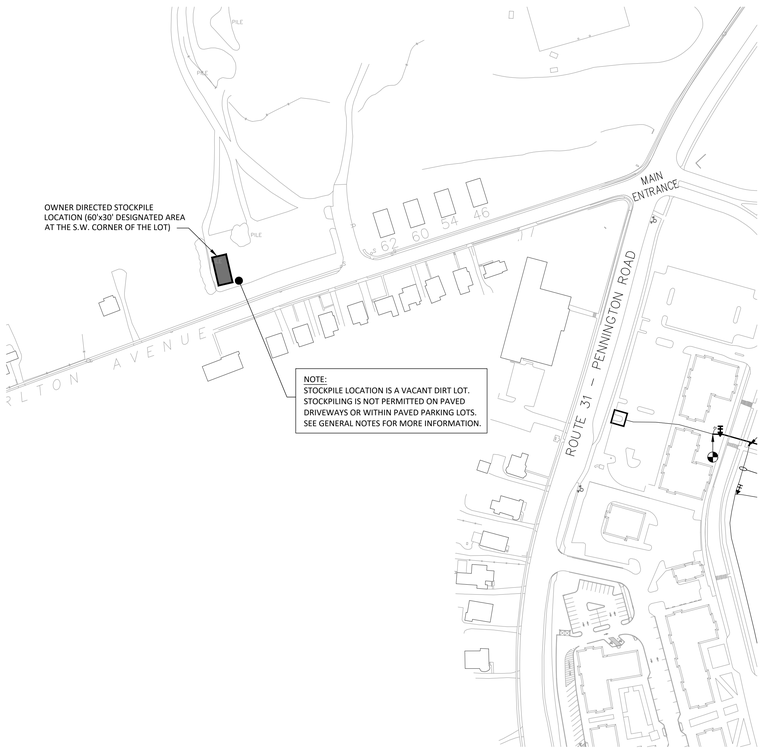

PARTIAL SITE PLAN | Scale: 1/128" = 1' | Drawing: **G007** | Detail: **01**

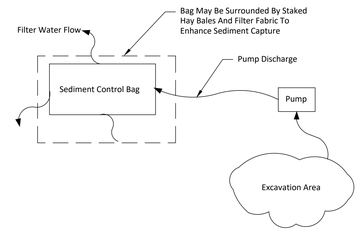

NOTES:
1. Bag Must Be Located Away From Receiving Waters And/Or Construction Activities
2. Bags Must Be Disposed Of According To Manufacturer's Instructions. Bags May Not Be Reused.

SEDIMENT CONTROL BAG FOR DEWATERING | Scale: NTS | Drawing: **G007** | Detail: **02**

CONSTRUCTION SEQUENCE

1. Install Silt Fence And Provide Inlet Protection - 5 Days
2. Notify The Mercer County Soil Conservation District 48 Hours Prior To Any Disturbance
3. Excavate Trenches Along Routings. Stockpile Topsoil Separately From Sub-Soil.
4. Install Underground Duct Bank And Manholes
5. Stabilize All Disturbed Areas Immediately After Conduit And Manhole Installations - (During The Duration Of Items #3 And 4)
6. Maintain Soil Erosion And Sediment Control Measures
7. Notify The Mercer County Soil Conservation District By Letter Requesting A Compliance Inspection
8. Remove Inlet Protection And Silt Fence After All Disturbed Areas Have Been Stabilized - 5 Days
9. Install Permanent Stabilization At All Areas Affected By Construction - 5 Days

GENERAL NOTES

1. Unsuitable Soils Or Soils That Are Not Planned To Be Reused Shall Be Trucked Out And Dispose Of Immediately Upon Excavation. Soils Of This Category Shall NOT Be Stockpiled. Receipt For Proper Disposal Shall Be Provided To TCNJ Upon Removal.
2. Where Practical, Soils Are Permitted To Be Stockpiled Next To The Trench As Shown In The Contract Documents. Soils Can Not Be Stockpiled Next To Trenches That Run Near Trees (Under Tree Drip Line) Or In Heavily Landscaped Areas.
3. Upon Completion Of Excavation And Backfill, All Soils Related To The Work Performed Under This Scope Shall Be Removed From The Carlton Avenue Lot And Disposed Of In An Approved Manor. Provide Receipt Of Disposal To TCNJ For Record.
4. The Carlton Avenue Lot Shall Be Restored To The Condition At The Time Of Bid Upon Completion Of The Project. This Includes Striping Where Damaged By Stockpiling.
5. Prior To Use Of The Carlton Avenue Lot The Contractor Must Inspect And Provide Photo Documentation Of Existing Conditions For Restoration Purposes.
6. Stockpile Is Only Permitted In Area Designated On This Plan. Carlton Avenue Lot Stockpile Shall Not Exceed The Noted 30'x60' Disruption Area At The South East Corner Of The Lot.

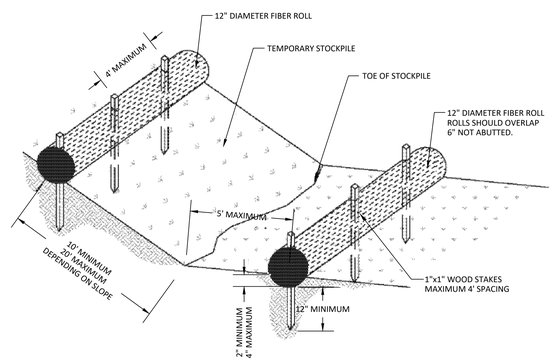

STOCKPILE PROTECTION PLAN | Scale: NTS | Drawing: **G007** | Detail: **03**

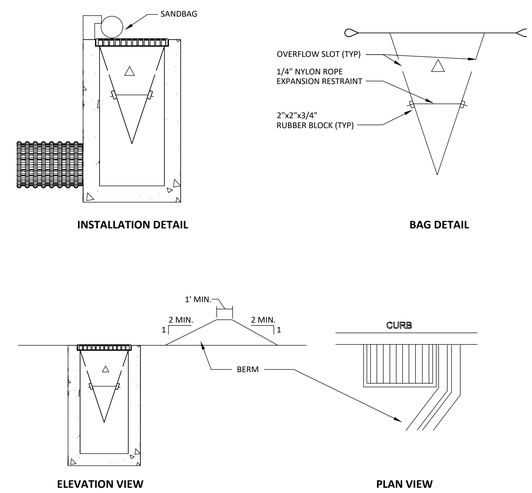

INSTALLATION DETAIL **BAG DETAIL** **ELEVATION VIEW** **PLAN VIEW**

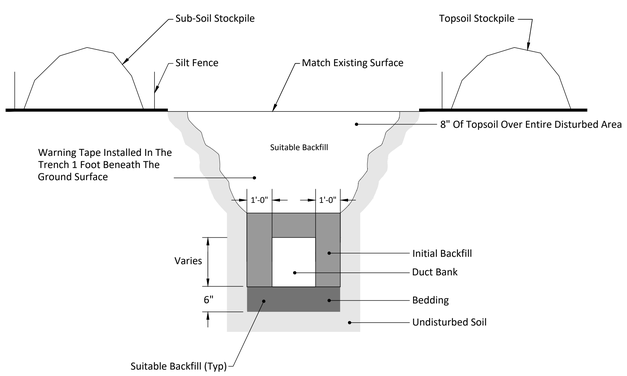

STABLE BEDDING FOUNDATION
(Dry, Suitable Bedding Conditions)

NOTES:
1. Suitable Backfill Shall Consist Of Bank Run Sand And Gravel Or Suitable Excavated Material Free From Organic Or Deleterious Material.
2. Unsuitable Material Encountered Beneath The Structure To Be Removed To A Depth Determined By The Engineer.
3. Suitable Backfill To Be Thoroughly Compacted By Mechanical Tamping (or By Hand Tamping When And Where Directed).
4. Suitable Backfill Shall Be Compacted To 95% Standard Proctor Density.
5. Areas Surrounding Pipe Shall Be Hand Tamped To Fill All Cavities.
6. Excavation Shall Comply With OSHA Requirements.
7. The Contractor Must Dewater Prior To Placing The Conduit If Wet Trench Conditions Are Found. The Conduit / Duct Bank Must Remain In Dry Conditions Until Backfilled.
8. The Contractor Shall Provide A Mock-Up Showing Excavation, Trenching, Bedding And Hauching For All Underground Duct Bank Installations.
9. Topsoil Shall Be Stripped And Stockpiles Separately From Subsoil For All Duct Bank Trenches.

TRENCH STOCKPILE DETAIL | Scale: NTS | Drawing: **G007** | Detail: **04**

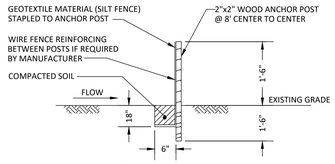

18" FILTER FABRIC FENCE

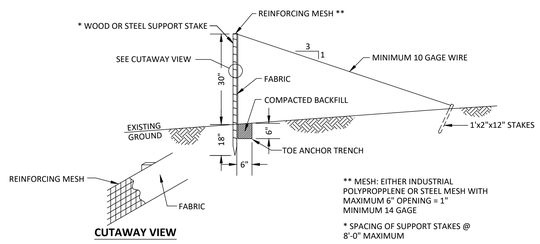

30" FILTER FABRIC FENCE

NOTES:
1. Filter Fabric Fence Must Be Installed At Level Grade. Both Ends Of Each Fence Section Must Be Extended At Least 8'-0" Upslope At 45 Degrees To The Main Fence Alignment.
2. Sediment Must Be Removed Where Accumulations Reach Half The Above Ground Height Of The Fence.
3. Any Fence Section Which Has Been Undermined Or Topped Must Be Immediately Replaced With A Rock Filter Outlet.

FILTER FABRIC DETAIL | Scale: NTS | Drawing: **G007** | Detail: **05**

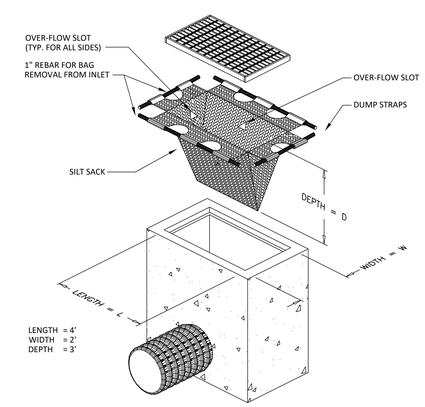

ISOMETRIC VIEW

NOTES:
1. Maximum Drainage Area = 1/2 Acre. Inlet Protection Is Not Required For Inlet Tributary To Sediment Basin Or Trap. Berms Are Required For All Installations.
2. Earthen Berm Shall Be Maintained Until Pavement And Roadways Is Stoned. Road Subbase Berm Shall Be Maintained Until Pavement And Roadway Are Paved.
3. Six Inch Minimum Height Asphalt Berm Shall Be Maintained Until Roadway Surface Received Final Coat.
4. The Contractor Shall Provide A Mock Up Prior To Construction For Owner And Engineer Approval.

EXISTING DRAINAGE SILK SACK DETAIL | Scale: NTS | Drawing: **G007** | Detail: **06**

ITEM	DATE	ISSUE DESCRIPTION	ITEM	DATE	ISSUE DESCRIPTION
1	09/18/19	ISSUED FOR BID			

30x42

dlb associates
CONSULTING ENGINEERS, P.C.
265 Industrial Way West, Eatontown, N.J. 07724
Questions For DLB Call: Anthony Laskosky
DLB Project ID: 47211 Phone: 732-927-5038

project: TCNJ - CAMPUS FIRE ALARM
CABLE INFRASTRUCTURE UPGRADES
2000 PENNINGTON ROAD,
EWING NJ, 08618

title: SOIL STORAGE AND PROTECTION INFORMATION

scale	drawn by	checked by	date
AS SHOWN	HF	ASL	09/18/2019

dwg. no. G007

This Drawing Is The Property Of DLB Associates Consulting Engineers, PC. It Was Prepared Exclusively For This Particular Project And Is Limited To This Project Only. Unauthorized Reproduction Or Other Use Of These Drawings Or Ideas Is Prohibited.

Confidential and Proprietary / ©DLB Associates 2019

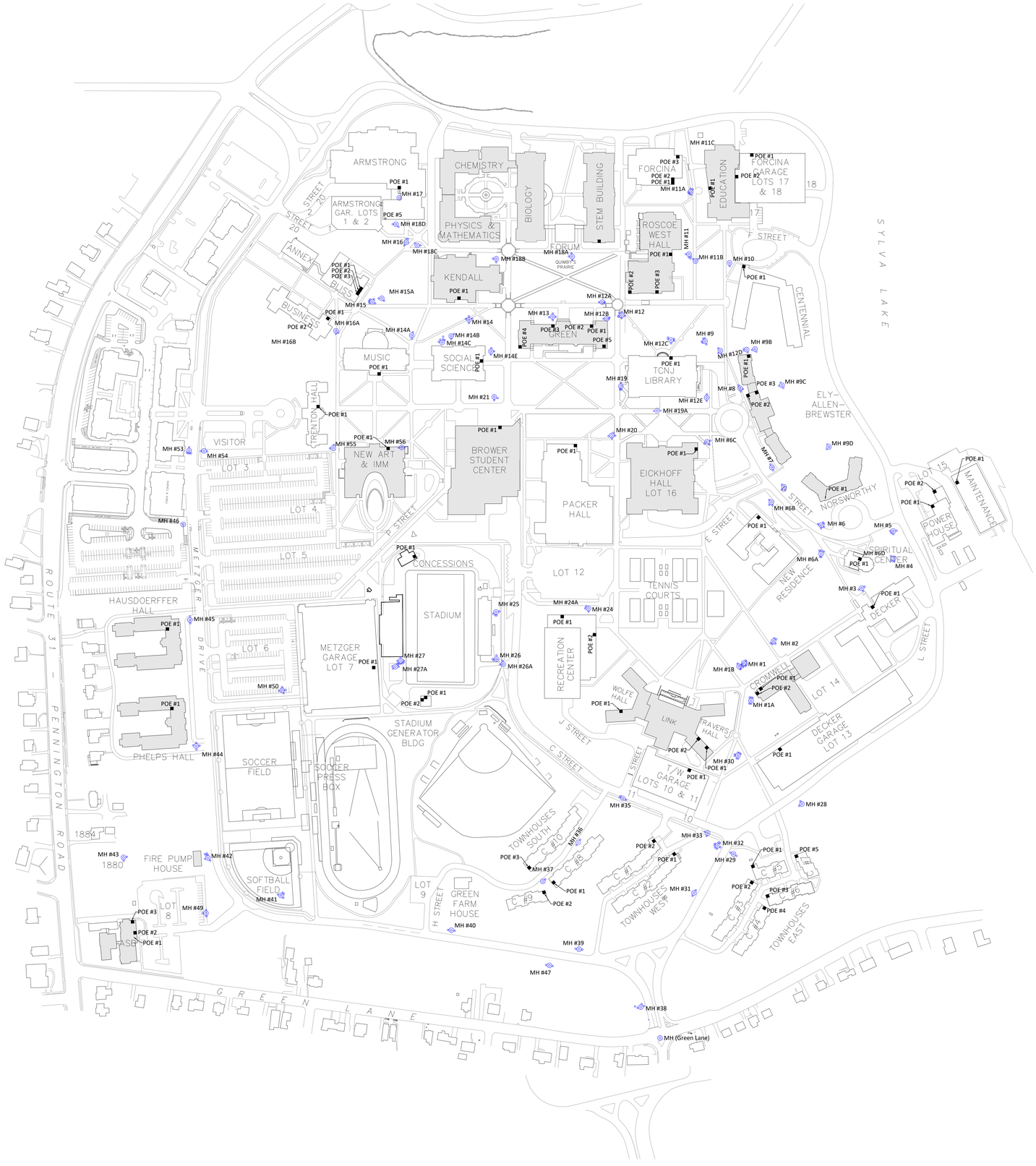

Fiber Routing

Span ID	Starting Building	Ending Building	Empty Conduit	Hybrid Cable To Be Installed
1	Armstrong Hall**	STEM Building	Yes	12/12
2	Bliss Hall	Kendall Hall	Yes	12/12
3	Business Building	Kendall Hall	No	12/12
4	Trenton Hall	Kendall Hall	No	12/12
5	Music Building	Kendall Hall	No	12/12
	AIMM Building	Kendall Hall	N/A	0*
6	Social Science	Kendall Hall	Yes	12/12
	Kendall Hall	Green Hall	Yes	0*
	Chemestry Building	STEM Building	N/A	0*
	Physics Building	STEM Building	N/A	0*
	Biology Building	STEM Building	N/A	0*
	STEM Building	Green Hall	N/A	0*
8	Forcina Hall	Roscoe Hall	Yes	12/12
	Education Building	Roscoe Hall	N/A	0*
9	Centennial Hall	Roscoe Hall	No	12/12
10	Gitenstein Library	Roscoe Hall	No	12/12
11	Roscoe Hall	Green Hall	No	12/12
	Norsworthy Hall	Ely-Allen-Brewster	N/A	0*
12	Spiritual Center	Ely-Allen-Brewster	No	12/12
13	Maintenance Building	Powerhouse	Yes	12/12
14	Powerhouse	Ely-Allen-Brewster	No	12/12
15	Decker Hall	Ely-Allen-Brewster	No	12/12
16	Ely-Allen-Brewster**	Green Hall	No	12/12
17	New Residence Hall	Eickhoff Hall	No	12/12
18	Packer Hall	Eickhoff Hall	No	12/12
	Brower Student Center	Eickhoff Hall	N/A	0*
19	Eickhoff Hall	Green Hall	No	12/12
20	TH1 (Town House West)	Cromwell Hall	No	48/48
21	TH5 21A/B (Town House East)	Cromwell Hall	No	(2) 36/36
22	TH9 (Town House South)	Cromwell Hall	No	48/48
23	Travers Hall	Cromwell Hall	Yes	12/12
	Wolfe Hall	Cromwell Hall	N/A	0*
24	Decker Garage	Cromwell Hall	Yes	12/12
25	Recreation Center	Cromwell Hall	No	12/12
26	Stadium Generator Building	Recreation Center	No	12/12
27	Stadium Concession Stand	Recreation Center	No	12/12
	Stadium Press Box	Stadium Generator Building	No	12/12
28	Soccer Field Press Box	Admin Splice	No	24/24
36	Admin Services Building	Admin Splice	N/A	36/36
29	Metzger Garage	Admin Splice	No	24/24
	Phelps Hall	Admin Splice	N/A	0*
	Hausdoerffer Hall	Admin Splice	N/A	0*
32	Cromwell Hall	Green Hall	No	12/12
33	Travers/Wolfe Garage	Travers Hall	Yes	12/12
34	Forcina Garage	Education Building	No	12/12
35	Fire Pump House	Admin Services Building	No	12/12

NOTES

1. * - Existing Fiber Spare Capacity Available At MDF For Fire Alarm Cable.
2. ** - New Pathway For This Route Installed As Part Of Domestic Water Project.
3. Contractor To Terminate All Fiber Strands On Both Ends Of Cable

GENERAL NOTES

1. This Sheet's Purpose Is To Show An Overview Of Buildings That Have Spare Existing Fiber Capacity At The MDF For The Fire Alarm Panel. Refer To The Building Drawing Series For Scope Of Work Inside These Buildings. Those Buildings Are Identified By The Shaded Rows In The Table Above.

PARTIAL SYMBOLS & ABBREVIATIONS

Identifier	Description
	Existing Manhole

Identifier	Description
MDF	Main Distribution Frame
MH	Manhole
MH#XX	Manhole Identification Tag
POE	Point Of Entry
WCH	Wall-Mounted Connector Housing

CAMPUS PLAN | Scale: 1"= 150'-0" | Drawing: FA001 | Detail: 01

30x42

ITEM	DATE	ISSUE DESCRIPTION	ITEM	DATE	ISSUE DESCRIPTION
1	09/18/19	ISSUED FOR BID			

dlb associates
CONSULTING ENGINEERS, P.C.
265 Industrial Way West, Eatontown, N.J. 07724
Questions For DLB Call: Anthony Laskosky
DLB Project ID: 47211 Phone: 732-927-5038

project
TCNJ - CAMPUS FIRE ALARM
CABLE INFRASTRUCTURE UPGRADES
2000 PENNINGTON ROAD,
EWING NJ, 08618

title
CAMPUS OVERVIEW
EXISTING FIBER

scale	drawn by	checked by	date
	SC	SG	09/18/2019

dwg. no.
FA001

This Drawing Is The Property Of DLB Associates Consulting Engineers, PC. It Was Prepared Exclusively For This Particular Project And Is Limited To This Project Only. Unauthorized Reproduction Or Other Use Of These Drawings Or Ideas Is Prohibited.

Confidential and Proprietary / ©DLB Associates 2019

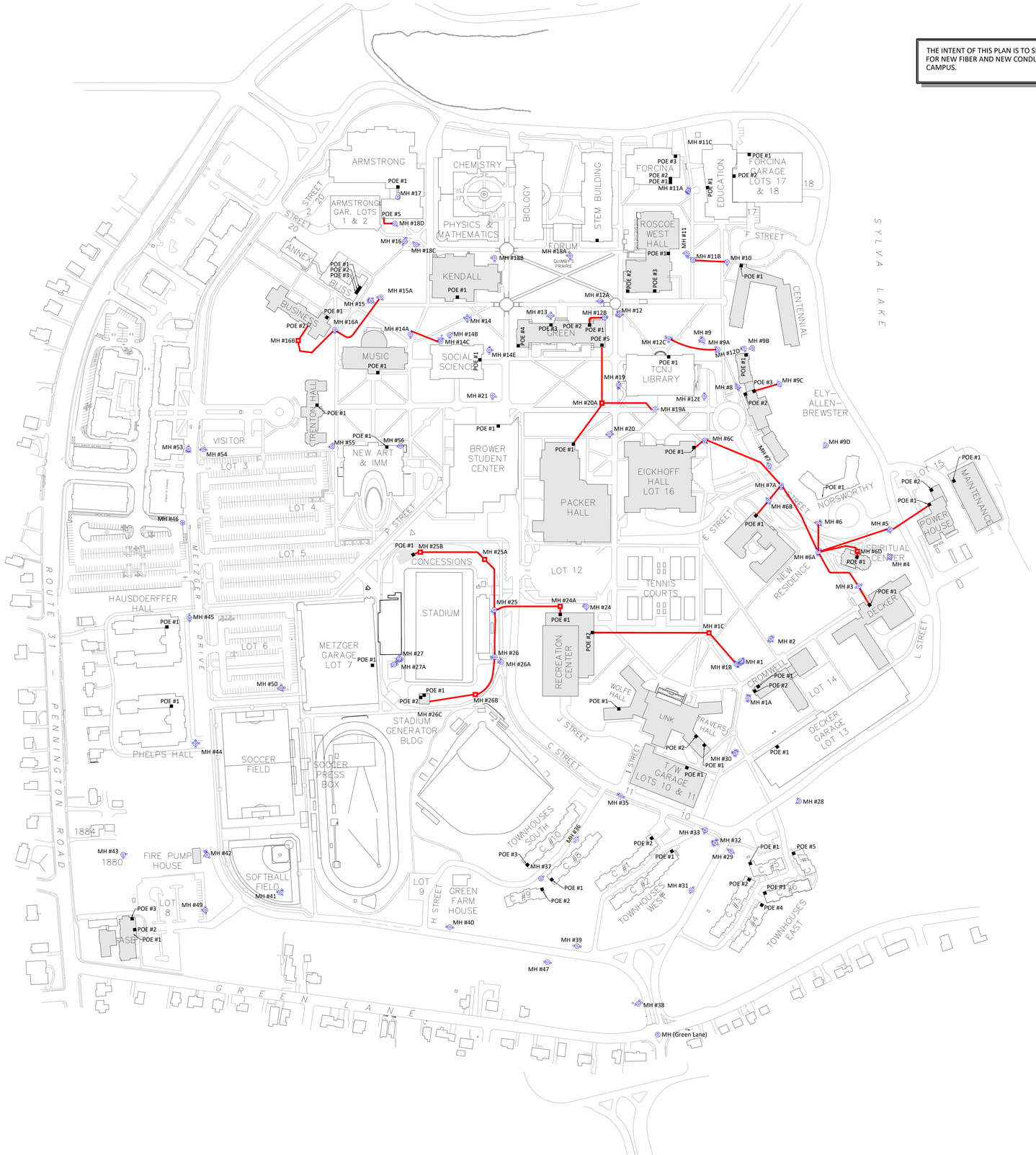

THE INTENT OF THIS PLAN IS TO SHOW THE GENERAL ROUTING FOR NEW FIBER AND NEW CONDUIT THROUGHOUT THE CAMPUS.

Fiber Routing

Span ID	Starting Building	Ending Building	Empty Conduit	Hybrid Cable To Be Installed
1	Armstrong Hall**	STEM Building	Yes	12/12
2	Bliss Hall	Kendall Hall	Yes	12/12
3	Business Building	Kendall Hall	No	12/12
4	Trenton Hall	Kendall Hall	No	12/12
5	Music Building	Kendall Hall	No	12/12
	AIMM Building	Kendall Hall	N/A	0*
6	Social Science	Kendall Hall	Yes	12/12
	Kendall Hall	Green Hall	Yes	0*
	Chemestry Building	STEM Building	N/A	0*
	Physics Building	STEM Building	N/A	0*
	Biology Building	STEM Building	N/A	0*
	STEM Building	Green Hall	N/A	0*
8	Forcina Hall	Roscoe Hall	Yes	12/12
	Education Building	Roscoe Hall	N/A	0*
9	Centennial Hall	Roscoe Hall	No	12/12
10	Gitenstein Library	Roscoe Hall	No	12/12
11	Roscoe Hall	Green Hall	No	12/12
	Norsworthy Hall	Ely-Allen-Brewster	N/A	0*
12	Spiritual Center	Ely-Allen-Brewster	No	12/12
13	Maintenance Building	Powerhouse	Yes	12/12
14	Powerhouse	Ely-Allen-Brewster	No	12/12
15	Decker Hall	Ely-Allen-Brewster	No	12/12
16	Ely-Allen-Brewster**	Green Hall	No	12/12
17	New Residence Hall	Eickhoff Hall	No	12/12
18	Packer Hall	Eickhoff Hall	No	12/12
	Brower Student Center	Eickhoff Hall	N/A	0*
19	Eickhoff Hall	Green Hall	No	12/12
20	TH1 (Town House West)	Cromwell Hall	No	48/48
21	TH5 21A/B (Town House East)	Cromwell Hall	No	(2) 36/36
22	TH9 (Town House South)	Cromwell Hall	No	48/48
23	Travers Hall	Cromwell Hall	Yes	12/12
	Wolfe Hall	Cromwell Hall	N/A	0*
24	Decker Garage	Cromwell Hall	Yes	12/12
25	Recreation Center	Cromwell Hall	No	12/12
26	Stadium Generator Building	Recreation Center	No	12/12
27	Stadium Concession Stand	Recreation Center	No	12/12
	Stadium Press Box	Stadium Generator Building	No	12/12
28	Soccer Field Press Box	Admin Splice	No	24/24
36	Admin Services Building	Admin Splice	N/A	36/36
29	Metzger Garage	Admin Splice	No	24/24
	Phelps Hall	Admin Splice	N/A	0*
	Hausdoerffer Hall	Admin Splice	N/A	0*
32	Cromwell Hall	Green Hall	No	12/12
33	Travers/Wolfe Garage	Travers Hall	Yes	12/12
34	Forcina Garage	Education Building	No	12/12
35	Fire Pump House	Admin Services Building	No	12/12

NOTES

1. * - Existing Fiber Spare Capacity Available At MDF For Fire Alarm Cable.
2. ** - New Pathway For This Route Installed As Part Of Domestic Water Project.
3. Contractor To Terminate All Fiber Strands On Both Ends Of Cable

GENERAL NOTES

1. This Sheet's Purpose Is To Show An Overview Of All The New Underground Conduit Duct Banks For the Campus. Those Buildings Are Identified By The Shaded Rows In The Table Above.
2. Contractor Shall Engage Private Utility Locating Service To Obtain Markout Of Existing Underground Utilities Using EM Scanning And GPR Methods. Provide TCNJ With Mapping Results Prior To Excavation.

PARTIAL SYMBOLS & ABBREVIATIONS

Identifier	Description
◎	Existing Manhole
■	New Manhole
	No Existing Fiber Available - New Duct Bank, Trenching, And New Fiber Required
#	Building To Building Span Number
	Building With New Conduit Connections

Identifier	Description
MDF	Main Distribution Frame
MH	Manhole
MH#XX	Manhole Identification Tag
POE	Point Of Entry
WCH	Wall-Mounted Connector Housing

CAMPUS PLAN | Scale: 1"= 150'-0" | Drawing: FA002 | Detail: 01

30x42

ITEM	DATE	ISSUE DESCRIPTION	ITEM	DATE	ISSUE DESCRIPTION
1	09/18/19	ISSUED FOR BID			

dlb associates
CONSULTING ENGINEERS, P.C.
265 Industrial Way West, Eatontown, N.J. 07724
Questions For DLB Call: Anthony Laskosky
DLB Project ID: 47211 Phone: 732-927-5038

project: TCNJ - CAMPUS FIRE ALARM CABLE INFRASTRUCTURE UPGRADES 2000 PENNINGTON ROAD, EWING NJ, 08618

title: CAMPUS OVERVIEW NEW FIBER & NEW CONDUIT

scale	drawn by	checked by	date
AS SHOWN	SC	SG	09/18/2019

dwg. no. FA002

This Drawing Is The Property Of DLB Associates Consulting Engineers, PC. It Was Prepared Exclusively For This Particular Project And Is Limited To This Project Only. Unauthorized Reproduction Or Other Use Of These Drawings Or Ideas Is Prohibited.

Confidential and Proprietary / ©DLB Associates 2019

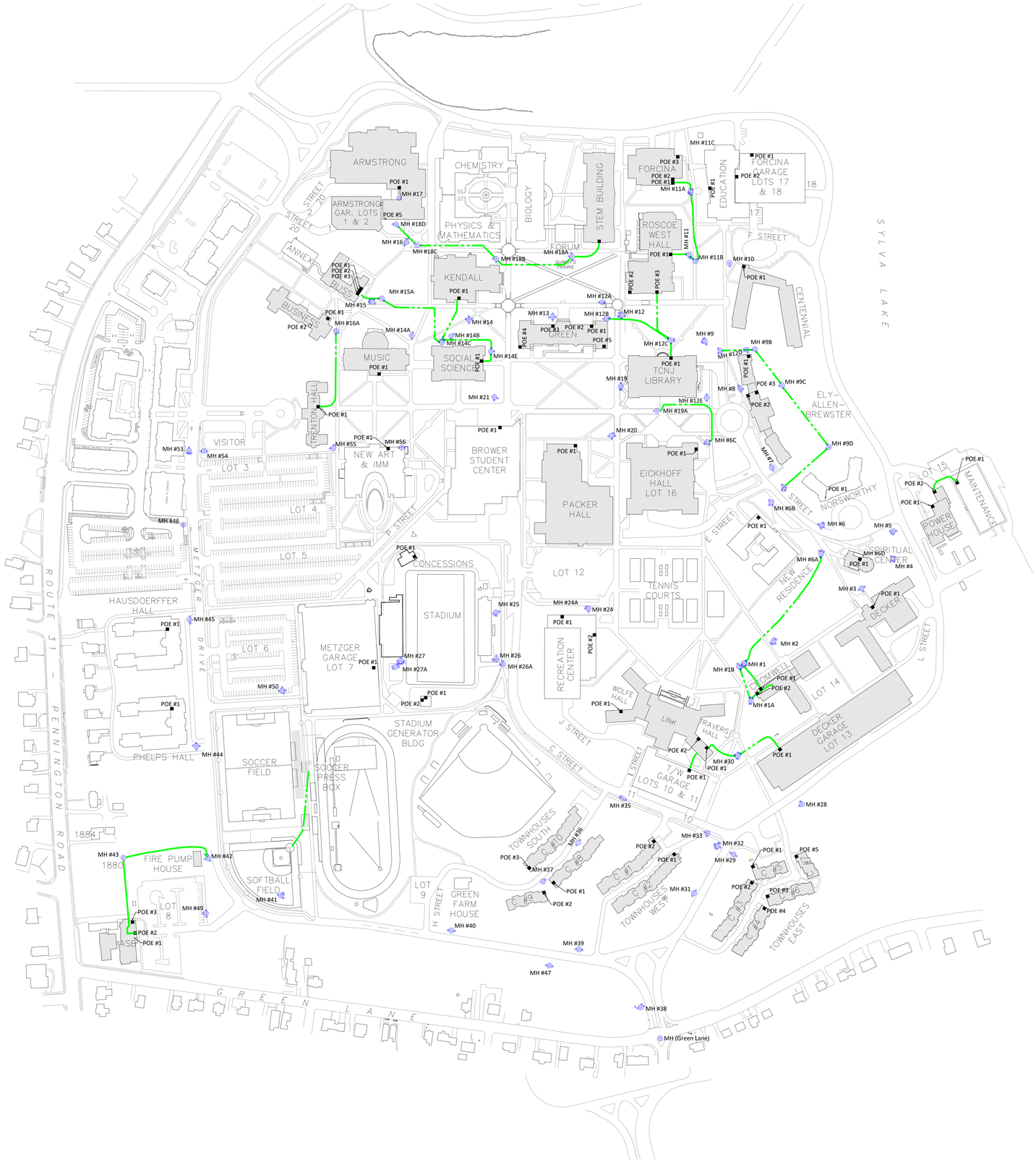

Fiber Routing

Span ID	Starting Building	Ending Building	Empty Conduit	Hybrid Cable To Be Installed
1	Armstrong Hall**	STEM Building	Yes	12/12
2	Bliss Hall	Kendall Hall	Yes	12/12
3	Business Building	Kendall Hall	No	12/12
4	Trenton Hall	Kendall Hall	No	12/12
5	Music Building	Kendall Hall	No	12/12
	AIMM Building	Kendall Hall	N/A	0*
6	Social Science	Kendall Hall	Yes	12/12
	Kendall Hall	Green Hall	Yes	0*
	Chemestry Building	STEM Building	N/A	0*
	Physics Building	STEM Building	N/A	0*
	Biology Building	STEM Building	N/A	0*
	STEM Building	Green Hall	N/A	0*
8	Forcina Hall	Roscoe Hall	Yes	12/12
	Education Building	Roscoe Hall	N/A	0*
9	Centennial Hall	Roscoe Hall	No	12/12
10	Gitenstein Library	Roscoe Hall	No	12/12
11	Roscoe Hall	Green Hall	No	12/12
	Norsworthy Hall	Ely-Allen-Brewster	N/A	0*
12	Spiritual Center	Ely-Allen-Brewster	No	12/12
13	Maintenance Building	Powerhouse	Yes	12/12
14	Powerhouse	Ely-Allen-Brewster	No	12/12
15	Decker Hall	Ely-Allen-Brewster	No	12/12
16	Ely-Allen-Brewster**	Green Hall	No	12/12
17	New Residence Hall	Eickhoff Hall	No	12/12
18	Packer Hall	Eickhoff Hall	No	12/12
	Brower Student Center	Eickhoff Hall	N/A	0*
19	Eickhoff Hall	Green Hall	No	12/12
20	TH1 (Town House West)	Cromwell Hall	No	48/48
21	TH5 21A/B (Town House East)	Cromwell Hall	No	(2) 36/36
22	TH9 (Town House South)	Cromwell Hall	No	48/48
23	Travers Hall	Cromwell Hall	Yes	12/12
	Wolfe Hall	Cromwell Hall	N/A	0*
24	Decker Garage	Cromwell Hall	Yes	12/12
25	Recreation Center	Cromwell Hall	No	12/12
26	Stadium Generator Building	Recreation Center	No	12/12
27	Stadium Concession Stand	Recreation Center	No	12/12
	Stadium Press Box	Stadium Generator Building	No	12/12
28	Soccer Field Press Box	Admin Splice	No	24/24
36	Admin Services Building	Admin Splice	N/A	36/36
29	Metzger Garage	Admin Splice	No	24/24
	Phelps Hall	Admin Splice	N/A	0*
	Hausdoerffer Hall	Admin Splice	N/A	0*
32	Cromwell Hall	Green Hall	No	12/12
33	Travers/Wolfe Garage	Travers Hall	Yes	12/12
34	Forcina Garage	Education Building	No	12/12
35	Fire Pump House	Admin Services Building	No	12/12

NOTES

1. * - Existing Fiber Spare Capacity Available At MDF For Fire Alarm Cable.
2. ** - New Pathway For This Route Installed As Part Of Domestic Water Project.
3. Contractor To Terminate All Fiber Strands On Both Ends Of Cable

GENERAL NOTES

1. This Sheet's Purpose Is To Show An Overview Of The Existing Underground Conduit Duct Banks With Available Spare Conduits That Are Proposed To Be Utilized For New Fiber Cables. Those Buildings Are Identified By The Shaded Rows In The Table Above.
2. Contractor Shall Clean The Existing Conduits Using Wire Brush Mandrill And Rubber Duct Swab Prior To Cable Installation.

PARTIAL SYMBOLS & ABBREVIATIONS

Identifier	Description
◎	Existing Manhole
■	New Manhole
	Existing Conduit Pathway Available For New Fiber Installation
#	Building To Building Span Number
	Building With New Conduit Connections

Identifier	Description
MDF	Main Distribution Frame
MH	Manhole
MH#XX	Manhole Identification Tag
POE	Point Of Entry
WCH	Wall-Mounted Connector Housing

CAMPUS PLAN | Scale: 1"= 150'-0" | Drawing: FA003 | Detail: 01

30x42

ITEM	DATE	ISSUE DESCRIPTION	ITEM	DATE	ISSUE DESCRIPTION
1	09/18/19	ISSUED FOR BID			

dlb associates
CONSULTING ENGINEERS, P.C.
265 Industrial Way West, Eatontown, N.J. 07724
Questions For DLB Call: Anthony Laskosky
DLB Project ID: 47211 Phone: 732-927-5038

project
TCNJ - CAMPUS FIRE ALARM
CABLE INFRASTRUCTURE UPGRADES
2000 PENNINGTON ROAD,
EWING NJ, 08618

title
CAMPUS OVERVIEW
NEW FIBER IN EXISTING EMPTY CONDUIT

scale	drawn by	checked by	date
AS SHOWN	SC	SG	09/18/2019

dwg. no.
FA003

This Drawing Is The Property Of DLB Associates Consulting Engineers, PC. It Was Prepared Exclusively For This Particular Project And Is Limited To This Project Only. Unauthorized Reproduction Or Other Use Of These Drawings Or Ideas Is Prohibited.

Confidential and Proprietary / ©DLB Associates 2019

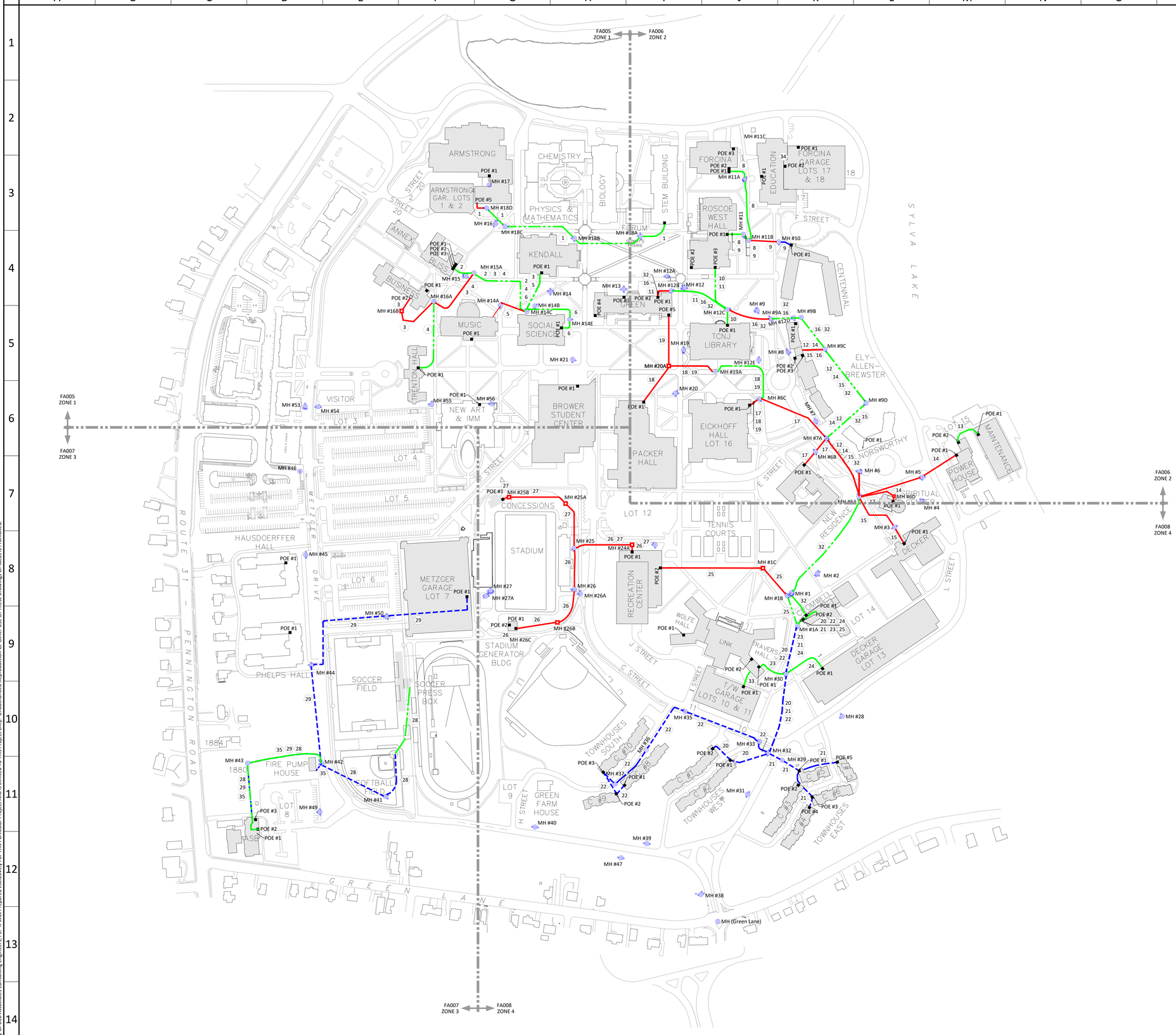

Fiber Routing

Span ID	Starting Building	Ending Building	Empty Conduit	Hybrid Cable To Be Installed
1	Armstrong Hall**	STEM Building	Yes	12/12
2	Bliss Hall	Kendall Hall	Yes	12/12
3	Business Building	Kendall Hall	No	12/12
4	Trenton Hall	Kendall Hall	No	12/12
5	Music Building	Kendall Hall	No	12/12
	AIMM Building	Kendall Hall	N/A	0*
6	Social Science	Kendall Hall	Yes	12/12
	Kendall Hall	Green Hall	Yes	0*
	Chemestry Building	STEM Building	N/A	0*
	Physics Building	STEM Building	N/A	0*
	Biology Building	STEM Building	N/A	0*
	STEM Building	Green Hall	N/A	0*
8	Forcina Hall	Roscoe Hall	Yes	12/12
	Education Building	Roscoe Hall	N/A	0*
9	Centennial Hall	Roscoe Hall	No	12/12
10	Gitenstein Library	Roscoe Hall	No	12/12
11	Roscoe Hall	Green Hall	No	12/12
	Norsworthy Hall	Ely-Allen-Brewster	N/A	0*
12	Spiritual Center	Ely-Allen-Brewster	No	12/12
13	Maintenance Building	Powerhouse	Yes	12/12
14	Powerhouse	Ely-Allen-Brewster	No	12/12
15	Decker Hall	Ely-Allen-Brewster	No	12/12
16	Ely-Allen-Brewster**	Green Hall	No	12/12
17	New Residence Hall	Eickhoff Hall	No	12/12
18	Packer Hall	Eickhoff Hall	No	12/12
	Brower Student Center	Eickhoff Hall	N/A	0*
19	Eickhoff Hall	Green Hall	No	12/12
20	TH1 (Town House West)	Cromwell Hall	No	48/48
21	TH5 21A/B (Town House East)	Cromwell Hall	No	(2) 36/36
22	TH9 (Town House South)	Cromwell Hall	No	48/48
23	Travers Hall	Cromwell Hall	Yes	12/12
	Wolfe Hall	Cromwell Hall	N/A	0*
24	Decker Garage	Cromwell Hall	Yes	12/12
25	Recreation Center	Cromwell Hall	No	12/12
26	Stadium Generator Building	Recreation Center	No	12/12
27	Stadium Concession Stand	Recreation Center	No	12/12
	Stadium Press Box	Stadium Generator Building	No	12/12
28	Soccer Field Press Box	Admin Splice	No	24/24
36	Admin Services Building	Admin Splice	N/A	36/36
29	Metzger Garage	Admin Splice	No	24/24
	Phelps Hall	Admin Splice	N/A	0*
	Hausdoerffer Hall	Admin Splice	N/A	0*
32	Cromwell Hall	Green Hall	No	12/12
33	Travers/Wolfe Garage	Travers Hall	Yes	12/12
34	Forcina Garage	Education Building	No	12/12
35	Fire Pump House	Admin Services Building	No	12/12

NOTES

1. * - Existing Fiber Spare Capacity Available At MDF For Fire Alarm Cable.
2. ** - New Pathway For This Route Installed As Part Of Domestic Water Project.
3. Contractor To Terminate All Fiber Strands On Both Ends Of Cable

GENERAL NOTES

1. This Sheet's Purpose Is To Show An Overview Of All The New And Existing Duct Bank Routing Within Scope For The Campus. Those Buildings Are Identified By The Shaded Rows In The Table Above.

PARTIAL SYMBOLS & ABBREVIATIONS

Identifier	Description
	Existing Manhole
	New Manhole
	Remove Existing Fiber And Pull New Fiber Through Empty Conduit Pathway
	Existing Conduit Pathway Available For New Fiber Installation
	No Existing Fiber Available - New Duct Bank, Trenching, And New Fiber Required
#	Building To Building Span Number
	Building With New Conduit Connections

Identifier	Description
XXXX ##	Detail Identifier Drawing # (Detail Location) Detail #
A	Photo Identification Tag
MDF	Main Distribution Frame
MH	Manhole
MH#XX	Manhole Identification Tag
POE	Point Of Entry
WCH	Wall-Mounted Connector Housing

CAMPUS PLAN | Scale: 1"= 150'-0" | Drawing: FA004 | Detail: 01

30x42

ITEM	DATE	ISSUE DESCRIPTION	ITEM	DATE	ISSUE DESCRIPTION
1	09/18/19	ISSUED FOR BID			

dlb associates
CONSULTING ENGINEERS, P.C.
265 Industrial Way West, Eatontown, N.J. 07724
Questions For DLB Call: Anthony Laskosky
DLB Project ID: 47211 Phone: 732-927-5038

project
TCNJ - CAMPUS FIRE ALARM
CABLE INFRASTRUCTURE UPGRADES
2000 PENNINGTON ROAD,
EWING NJ, 08618

title
CAMPUS FIRE ALARM FIBER OVERVIEW

scale	drawn by	checked by	date
AS SHOWN	SC	SG	09/18/2019

dwg. no.
FA004

This Drawing Is The Property Of DLB Associates Consulting Engineers, PC. It Was Prepared Exclusively For This Particular Project And Is Limited To This Project Only. Unauthorized Reproduction Or Other Use Of These Drawings Or Ideas Is Prohibited.

Confidential and Proprietary / ©DLB Associates 2019

PHOTO A - ARMSTRONG HALL EXTERIOR
Bushes And Sidewalk Space Along Side Of
Physics Building Leading To Armstrong Hall

PHOTO B - MANHOLE 15A TO 16A
Area For New Duct Bank Routing From Manhole 15A To Manhole 16A Includes Hardscapes Such As Brick And Concrete

TCNJ - Manhole Conduit Counts - Alternate

Routing	Base Bid (Quantity Of Conduits)	Alternate 2 (Quantity Of Conduits)
A	B	C
MH-15A To MH-16A	2	4
Power House To MH-5	2	4
MH-5 To MH-6A	2	4
MH-6C To MH-7A	2	4
Eickhoff Hall To MH-6C	2	4
MH-1B To MH-1C	2	4
MH-3 to MH-6A	2	4

Refer To Details, FA006, And FA008 For Further Information Regarding This Alternate.

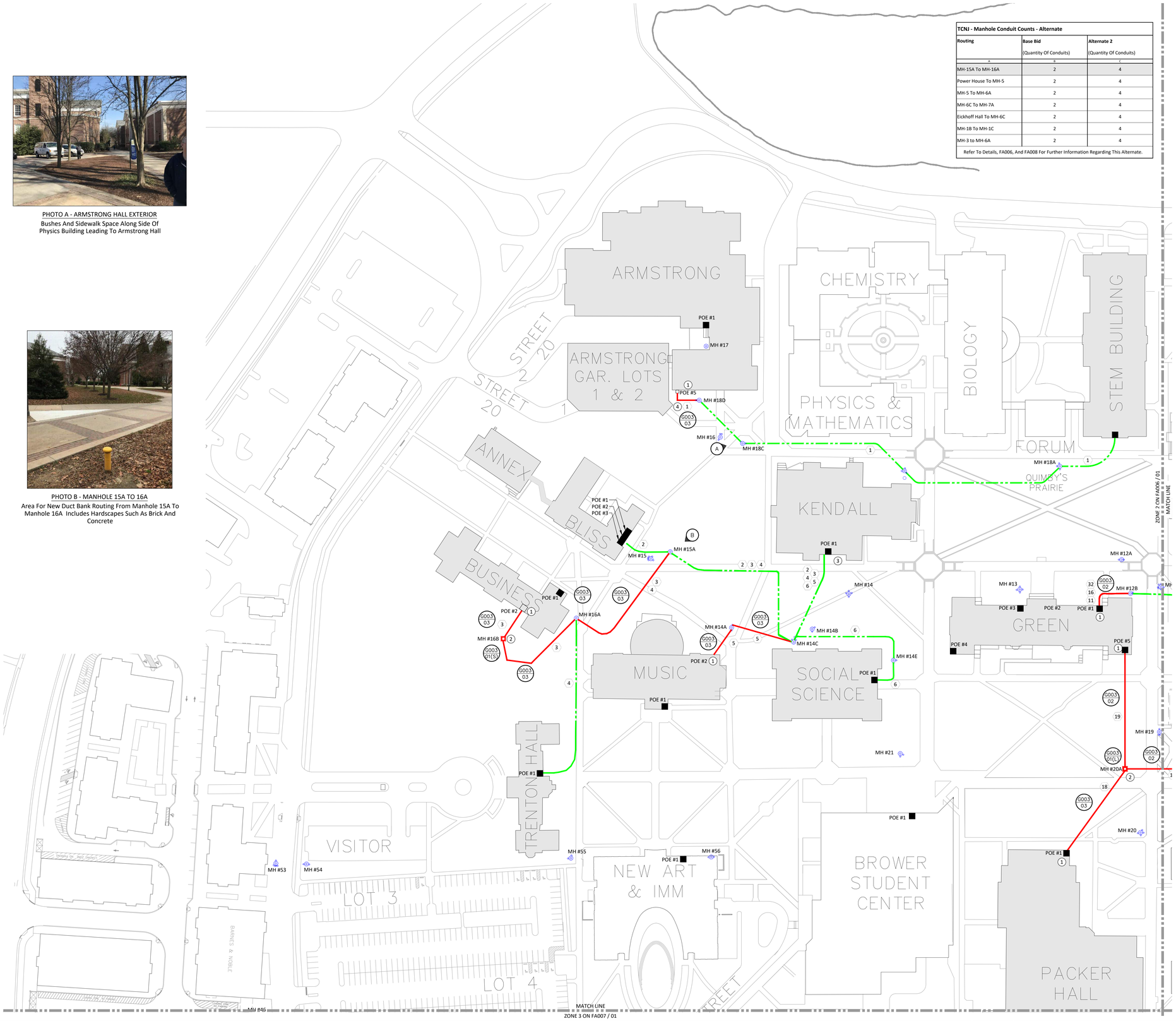

Fiber Routing					
Span ID	Starting Building	Ending Building	Empty Conduit	Hybrid Cable To Be Installed	
				Base Bid	Alternate #1
1	Armstrong Hall**	STEM Building	Yes	12/12	
2	Bliss Hall	Kendall Hall	Yes	12/12	48/48
3	Business Building	Kendall Hall	No	12/12	24/24
4	Trenton Hall	Kendall Hall	No	12/12	36/36
5	Music Building	Kendall Hall	No	12/12	24/24
	AIMM Building	Kendall Hall	N/A	0*	
6	Social Science	Kendall Hall	Yes	12/12	36/36
	Kendall Hall	Green Hall	Yes		144/144
	Chemestry Building	STEM Building	N/A	0*	
	Physics Building	STEM Building	N/A	0*	
	Biology Building	STEM Building	N/A	0*	
	STEM Building	Green Hall	N/A	0*	
8	Forcina Hall	Roscoe Hall	Yes	12/12	24/24
	Education Building	Roscoe Hall	N/A	0*	
9	Centennial Hall	Roscoe Hall	No	12/12	24/24
10	Gitenstein Library	Roscoe Hall	No	12/12	36/36
11	Roscoe Hall	Green Hall	No	12/12	96/96
	Norsworthy Hall	Ely-Allen-Brewster	N/A	0*	
12	Spiritual Center	Ely-Allen-Brewster	No	12/12	
13	Maintenance Building	Powerhouse	Yes	12/12	24/24
14	Powerhouse	Ely-Allen-Brewster	No	12/12	48/48
15	Decker Hall	Ely-Allen-Brewster	No	12/12	36/36
16	Ely-Allen-Brewster**	Green Hall	No	12/12	144/144
17	New Residence Hall	Eickhoff Hall	No	12/12	24/24
18	Packer Hall	Eickhoff Hall	No	12/12	36/36
	Brower Student Center	Eickhoff Hall	N/A	0*	
19	Eickhoff Hall	Green Hall	No	12/12	96/96
20	TH1 (Town House West)	Cromwell Hall	No	48/48	
21	TH5 21A/B (Town House East	Cromwell Hall	No	(2) 36/36	
22	TH9 (Town House South)	Cromwell Hall	No	48/48	
23	Travers Hall	Cromwell Hall	Yes	12/12	
	Wolfe Hall	Cromwell Hall	N/A	0*	
24	Decker Garage	Cromwell Hall	Yes	12/12	
25	Recreation Center	Cromwell Hall	No	12/12	36/36
26	Stadium Generator Building	Recreation Center	No	12/12	
27	Stadium Concession Stand	Recreation Center	No	12/12	
28	Soccer Field Press Box 28A/B	Admin Splice	No	24/24	36/36
29	Metzger Garage	Admin Splice	No	24/24	
	Phelps Hall	Admin Splice	N/A	0*	
	Hausdoerffer Hall	Admin Splice	N/A	0*	
32	Cromwell Hall	Green Hall	No	12/12	144/144
33	Travers/Wolfe Garage	Travers Hall	Yes	12/12	
34	Forcina Garage	Education Building	No	12/12	
35	Fire Pump House	Admin Services Building	No	12/12	
36	Admin Services Building	Admin Splice	N/A	36/36	
41	Eickhoff Room 227	Eickhoff Room 337	No	-	48/48

KEY NOTES (SYMBOLS 1, 2, ETC.)

1. Install New Point Of Entry From New Duct Bank Into Building. Core Drill Wall As Required For Conduit Entry. Coordinate Exact POE Location With Field Conditions.
2. New Manhole To Be Installed In This Location. See Sheet G003 / 01 For More Details.
3. Coordinate With IT For Spare Fiber Connections In This Area. Fiber Shall Be Pulled In Existing Spare Conduit. Coordinate With IT Department To Have Existing Fiber Connection Changed To Allow Existing To Be Pulled Out.
4. Remove And Replace Trees, Bushes And Shrubbery In Order To Install Undergound Conduit. Coordinate With TCNJ. See Sheet G002 For Additional Information.

GENERAL NOTES

1. All Conduit Sweeps Shall Not Be Less Than 10 Times The Inside Diameter Of The Conduit.
2. Provide Warning Tape Above All Duct Banks.
3. Provide (3) 1-1/2" Innerducts In One Of The Active Conduits Per Ductbank. Provide Pull Cords In Each Spare Conduit And Each Spare Inner Duct Per Duct Bank.
4. Provide A #6 Ground Wire Along All Underground Conduit Routing. All Grounds Shall Be Tied In At Manhole Locations.
5. Provide A 5/8 Inch X 10 Foot Ground Rod At Each Manhole Location. Attached A #2 Solid Tinned Ground Conductor From The Ground Rod To The Bonding Ribbon In The Manhole.
6. All Manhole Locations And Ductbank Routings Shall Be Coordinated With Existing Underground Utilities And Infrastructure.
7. Contractor Shall Obtain A Private Mark Out Of The Area Of Work. Contractor Also To Coordinate With Local Utility Companies And New Jersey One Call (811) As Required By Those Entities To Identify And Mark Out All Buried Infrastructure And Utilities In The Vicinity Of Proposed Conduit Routing Prior To Any Excavation. Hand Digging In Certain Locations Is Highly Recommended.
8. Coordinate Routing Of Underground Duct Banks With Existing Field Conditions.

PARTIAL SYMBOLS & ABBREVIATIONS

Identifier	Description
	Existing Manhole
	New Manhole
	Remove Existing Fiber And Pull New Fiber Through Empty Conduit Pathway
	Existing Conduit Pathway Available For New Fiber Installation
	No Existing Fiber Available - New Duct Bank, Trenching, And New Fiber Required
#	Building To Building Span Number

Identifier	Description
	Detail Identifier
GXXX / ##	Drawing # (Detail Location) / Detail #
A	Photo Identification Tag
MDF	Main Distribution Frame
MH	Manhole
MH#XX	Manhole Identification Tag
POE	Point Of Entry
WCH	Wall-Mounted Connector Housing

CAMPUS FIBER PART PLAN | Scale: 1/64"=1'-0" | 16' 32' 64' 128' | Drawing: FA005 | Detail: 01

ITEM	DATE	ISSUE DESCRIPTION	ITEM	DATE	ISSUE DESCRIPTION
1	09/18/19	ISSUED FOR BID			

30x42

dlb associates
CONSULTING ENGINEERS, P.C.
265 Industrial Way West, Eatontown, N.J. 07724
Questions For DLB Call: Anthony Laskosky
DLB Project ID: 47211 Phone: 732-927-5038

project: TCNJ - CAMPUS FIRE ALARM CABLE INFRASTRUCTURE UPGRADES 2000 PENNINGTON ROAD, EWING NJ, 08618

title: CAMPUS CONDUIT ROUTING PLAN ZONE 1

scale	drawn by	checked by	date
AS SHOWN	SC	SG	09/18/2019

dwg. no. FA005

This Drawing Is The Property Of DLB Associates Consulting Engineers, PC. It Was Prepared Exclusively For This Particular Project And Is Limited To This Project Only. Unauthorized Reproduction Or Other Use Of These Drawings Or Ideas Is Prohibited.

Confidential and Proprietary / ©DLB Associates 2019

PHOTO A - MAINTENANCE BUILDING TO POWER HOUSE
Location For New Duct Bank And Fiber Between The Maintenance Building And The Power House. Route Includes Hardscapes Such As Brick And Concrete.

PHOTO D - OUTSIDE NEW LIBRARY
Location For New Manhole And Duct Bank Routing From New Library To Green Hall. Route Includes Hardscapes Such As Brick And Concrete.

PHOTO C - OUTSIDE EAB
Location For New Manhole And Duct Bank Routing Directly South Of EAB. Route Includes Hardscapes Such As Brick And Concrete.

PHOTO E - NORTH EAB
Location For New Manhole And Duct Bank Routing From New Manhole North Of EAB To Manhole 12C. Route Includes Hardscapes Such As Brick And Concrete.

TCNJ - Manhole Conduit Counts - Alternate

Routing	Base Bid (Quantity Of Conduits)	Alternate 2 (Quantity Of Conduits)
A	B	C
MH-15A To MH-16A	2	4
Power House To MH-5	2	4
MH-5 To MH-6A	2	4
MH-6C To MH-7A	2	4
Eickhoff Hall To MH-6C	2	4
MH-1B To MH-1C	2	4
MH-3 to MH-6A	2	4

Refer To Details, FA006, And FA008 For Further Information Regarding This Alternate.

Fiber Routing

Span ID	Starting Building	Ending Building	Empty Conduit	Hybrid Cable To Be Installed: Base Bid	Hybrid Cable To Be Installed: Alternate #1
1	Armstrong Hall**	STEM Building	Yes	12/12	
2	Bliss Hall	Kendall Hall	Yes	12/12	48/48
3	Business Building	Kendall Hall	No	12/12	24/24
4	Trenton Hall	Kendall Hall	No	12/12	36/36
5	Music Building	Kendall Hall	No	12/12	24/24
	AIMM Building	Kendall Hall	N/A	0*	
6	Social Science	Kendall Hall	Yes	12/12	36/36
	Kendall Hall	Green Hall	Yes		144/144
	Chemestry Building	STEM Building	N/A	0*	
	Physics Building	STEM Building	N/A	0*	
	Biology Building	STEM Building	N/A	0*	
	STEM Building	Green Hall	N/A	0*	
8	Forcina Hall	Roscoe Hall	Yes	12/12	24/24
	Education Building	Roscoe Hall	N/A	0*	
9	Centennial Hall	Roscoe Hall	No	12/12	24/24
10	Gitenstein Library	Roscoe Hall	No	12/12	36/36
11	Roscoe Hall	Green Hall	No	12/12	96/96
	Norsworthy Hall	Ely-Allen-Brewster	N/A	0*	
12	Spiritual Center	Ely-Allen-Brewster	No	12/12	
13	Maintenance Building	Powerhouse	Yes	12/12	24/24
14	Powerhouse	Ely-Allen-Brewster	No	12/12	48/48
15	Decker Hall	Ely-Allen-Brewster	No	12/12	36/36
16	Ely-Allen-Brewster**	Green Hall	No	12/12	144/144
17	New Residence Hall	Eickhoff Hall	No	12/12	24/24
18	Packer Hall	Eickhoff Hall	No	12/12	36/36
	Brower Student Center	Eickhoff Hall	N/A	0*	
19	Eickhoff Hall	Green Hall	No	12/12	96/96
20	TH1 (Town House West)	Cromwell Hall	No	48/48	
21	TH5 21A/B (Town House East	Cromwell Hall	No	(2) 36/36	
22	TH9 (Town House South)	Cromwell Hall	No	48/48	
23	Travers Hall	Cromwell Hall	Yes	12/12	
	Wolfe Hall	Cromwell Hall	N/A	0*	
24	Decker Garage	Cromwell Hall	Yes	12/12	
25	Recreation Center	Cromwell Hall	No	12/12	36/36
26	Stadium Generator Building	Recreation Center	No	12/12	
27	Stadium Concession Stand	Recreation Center	No	12/12	
28	Soccer Field Press Box 28A/B	Admin Splice	No	24/24	36/36
29	Metzger Garage	Admin Splice	No	24/24	
	Phelps Hall	Admin Splice	N/A	0*	
	Hausdoerffer Hall	Admin Splice	N/A	0*	
32	Cromwell Hall	Green Hall	No	12/12	144/144
33	Travers/Wolfe Garage	Travers Hall	Yes	12/12	
34	Forcina Garage	Education Building	No	12/12	
35	Fire Pump House	Admin Services Building	No	12/12	
36	Admin Services Building	Admin Splice	N/A	36/36	
41	Eickhoff Room 227	Eickhoff Room 337	No	-	48/48

KEY NOTES (SYMBOLS 1, 2, ETC.)

1. Install New Point Of Entry From New Duct Bank Into Building. Core Drill Wall As Required For Conduit Entry. Coordinate Exact POE Location With Field Conditions.
2. New Manhole To Be Installed In This Location. See Sheet G003 / 01 For More Details.
3. Coordinate With IT For Spare Fiber Connections In This Area. Fiber Shall Be Pulled In Existing Spare Conduit. Coordinate With IT Department To Have Existing Fiber Connection Changed To Allow Existing To Be Pulled Out.
4. Remove And Replace Trees, Bushes And Shrubbery In Order To Install Undergound Conduit. Coordinate With TCNJ. See Sheet G002 For Additional Information.

GENERAL NOTES

1. All Conduit Sweeps Shall Not Be Less Than 10 Times The Inside Diameter Of The Conduit.
2. Provide Warning Tape Above All Duct Banks.
3. Provide (3) 1-1/2" Innerducts In One Of The Active Conduits Per Ductbank. Provide Pull Cords In Each Spare Conduit And Each Spare Inner Duct Per Duct Bank.
4. Provide A #6 Ground Wire Along All Underground Conduit Routing. All Grounds Shall Be Tied In At Manhole Locations.
5. Provide A 5/8 Inch X 10 Foot Ground Rod At Each Manhole Location. Attached A #2 Solid Tinned Ground Conductor From The Ground Rod To The Bonding Ribbon In The Manhole.
6. All Manhole Locations And Ductbank Routings Shall Be Coordinated With Existing Underground Utilities And Infrastructure.
7. All Ductbanks Shall Be Encased In Flowable Fill.
8. Contractor Shall Obtain A Private Mark Out Of The Area Of Work. Contractor Also To Coordinate With Local Utility Companies And New Jersey One Call (811) As Required By Those Entities To Identify And Mark Out All Buried Infrastructure And Utilities In The Vicinity Of Proposed Conduit Routing Prior To Any Excavation. Hand Digging In Certain Locations Is Highly Recommended.
9. Coordinate Routing Of Underground Duct Banks With Existing Field Conditions.

PARTIAL SYMBOLS & ABBREVIATIONS

Identifier	Description
	Existing Manhole
	New Manhole
	Remove Existing Fiber And Pull New Fiber Through Empty Conduit Pathway
	Existing Conduit Pathway Available For New Fiber Installation
	No Existing Fiber Available - New Duct Bank, Trenching, And New Fiber Required
#	Building To Building Span ID

Identifier	Description
	Detail Identifier
GXXX / ##	Drawing # (Detail Location) / Detail #
A	Photo Identification Tag
MDF	Main Distribution Frame
MH	Manhole
MH#XX	Manhole Identification Tag
POE	Point Of Entry
WCH	Wall-Mounted Connector Housing

CAMPUS FIBER PART PLAN

Scale: 1/64"=1'-0" (16' 32' 64' 128')

Drawing: FA006
Detail: 01

30x42

ITEM	DATE	ISSUE DESCRIPTION	ITEM	DATE	ISSUE DESCRIPTION
1	09/18/19	ISSUED FOR BID			

dlb associates
CONSULTING ENGINEERS, P.C.
265 Industrial Way West, Eatontown, N.J. 07724
Questions For DLB Call: Anthony Laskosky
DLB Project ID: 47211 Phone: 732-927-5038

project
TCNJ - CAMPUS FIRE ALARM
CABLE INFRASTRUCTURE UPGRADES
2000 PENNINGTON ROAD,
EWING NJ, 08618

title
CAMPUS CONDUIT ROUTING PLAN
ZONE 2

scale	drawn by	checked by	date
AS SHOWN	SC	SG	09/18/2019

dwg. no.
FA006

This Drawing Is The Property Of DLB Associates Consulting Engineers, PC. It Was Prepared Exclusively For This Particular Project And Is Limited To This Project Only. Unauthorized Reproduction Or Other Use Of These Drawings Or Ideas Is Prohibited.

Confidential and Proprietary / ©DLB Associates 2019

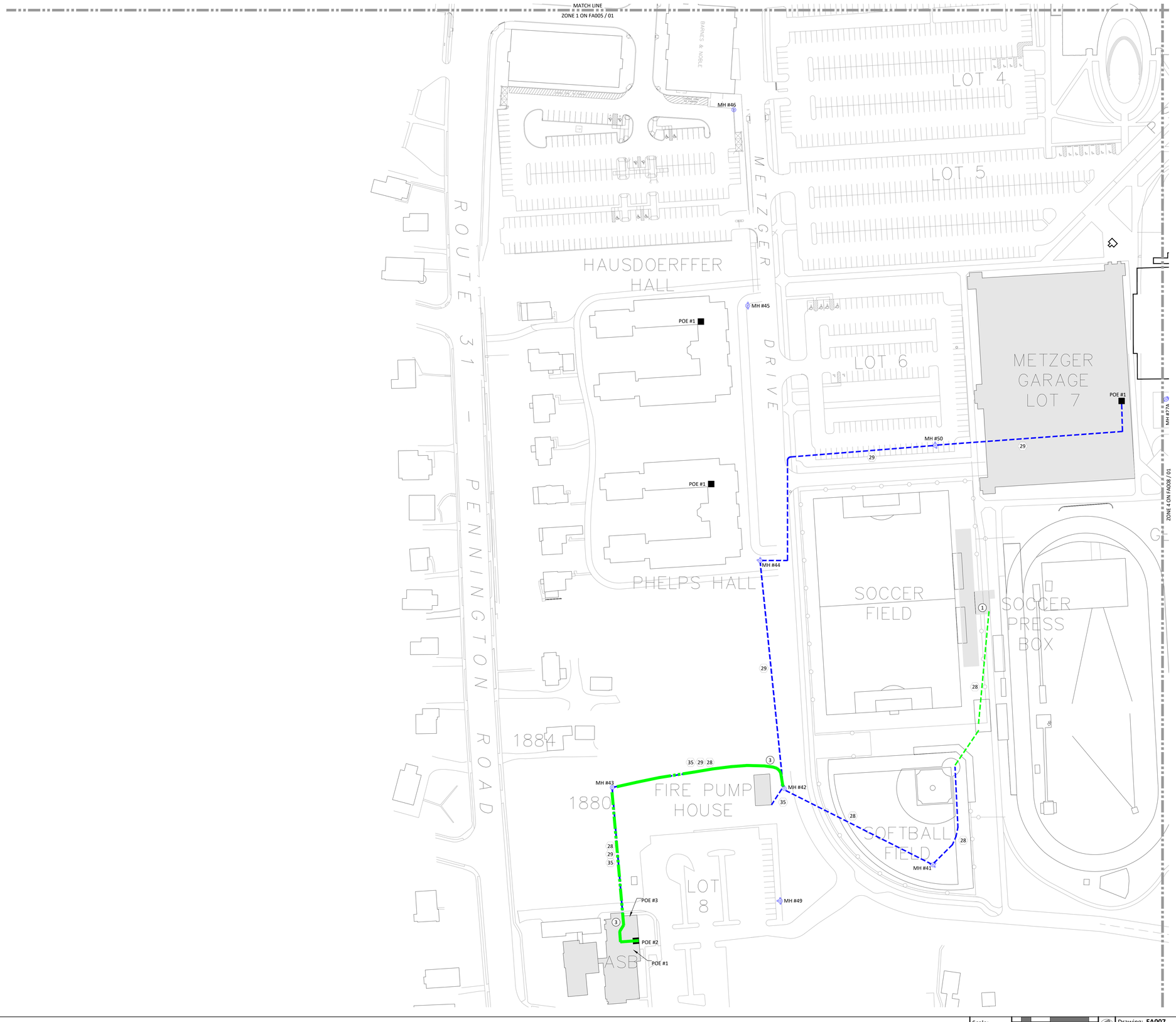

Fiber Routing					
Span ID	Starting Building	Ending Building	Empty Conduit	Hybrid Cable To Be Installed	
				Base Bid	Alternate #1
1	Armstrong Hall**	STEM Building	Yes	12/12	
2	Bliss Hall	Kendall Hall	Yes	12/12	48/48
3	Business Building	Kendall Hall	No	12/12	24/24
4	Trenton Hall	Kendall Hall	No	12/12	36/36
5	Music Building	Kendall Hall	No	12/12	24/24
	AIMM Building	Kendall Hall	N/A	0*	
6	Social Science	Kendall Hall	Yes	12/12	36/36
	Kendall Hall	Green Hall	Yes		144/144
	Chemestry Building	STEM Building	N/A	0*	
	Physics Building	STEM Building	N/A	0*	
	Biology Building	STEM Building	N/A	0*	
	STEM Building	Green Hall	N/A	0*	
8	Forcina Hall	Roscoe Hall	Yes	12/12	24/24
	Education Building	Roscoe Hall	N/A	0*	
9	Centennial Hall	Roscoe Hall	No	12/12	24/24
10	Gitenstein Library	Roscoe Hall	No	12/12	36/36
11	Roscoe Hall	Green Hall	No	12/12	96/96
	Norsworthy Hall	Ely-Allen-Brewster	N/A	0*	
12	Spiritual Center	Ely-Allen-Brewster	No	12/12	
13	Maintenance Building	Powerhouse	Yes	12/12	24/24
14	Powerhouse	Ely-Allen-Brewster	No	12/12	48/48
15	Decker Hall	Ely-Allen-Brewster	No	12/12	36/36
16	Ely-Allen-Brewster**	Green Hall	No	12/12	144/144
17	New Residence Hall	Eickhoff Hall	No	12/12	24/24
18	Packer Hall	Eickhoff Hall	No	12/12	36/36
	Brower Student Center	Eickhoff Hall	N/A	0*	
19	Eickhoff Hall	Green Hall	No	12/12	96/96
20	TH1 (Town House West)	Cromwell Hall	No	48/48	
21	TH5 21A/B (Town House East	Cromwell Hall	No	(2) 36/36	
22	TH9 (Town House South)	Cromwell Hall	No	48/48	
23	Travers Hall	Cromwell Hall	Yes	12/12	
	Wolfe Hall	Cromwell Hall	N/A	0*	
24	Decker Garage	Cromwell Hall	Yes	12/12	
25	Recreation Center	Cromwell Hall	No	12/12	36/36
26	Stadium Generator Building	Recreation Center	No	12/12	
27	Stadium Concession Stand	Recreation Center	No	12/12	
28	Soccer Field Press Box 28A/B	Admin Splice	No	24/24	36/36
29	Metzger Garage	Admin Splice	No	24/24	
	Phelps Hall	Admin Splice	N/A	0*	
	Hausdoerffer Hall	Admin Splice	N/A	0*	
32	Cromwell Hall	Green Hall	No	12/12	144/144
33	Travers/Wolfe Garage	Travers Hall	Yes	12/12	
34	Forcina Garage	Education Building	No	12/12	
35	Fire Pump House	Admin Services Building	No	12/12	
36	Admin Services Building	Admin Splice	N/A	36/36	
41	Eickhoff Room 227	Eickhoff Room 337	No	-	48/48

KEY NOTES (SYMBOLS 1, 2, ETC.)

1. Install New Point Of Entry From New Duct Bank Into Building. Core Drill Wall As Required For Conduit Entry. Coordinate Exact POE Location With Field Conditions.
2. New Manhole To Be Installed In This Location. See Sheet G003 / 01 For More Details.
3. Coordinate With IT For Spare Fiber Connections In This Area. Fiber Shall Be Pulled In Existing Spare Conduit. Coordinate With IT Department To Have Existing Fiber Disconnection To Allow Existing To Be Pulled Out.
4. Remove And Replace Trees, Bushes And Shrubbery In Order To Install Undergound Conduit. Coordinate With TCNJ. See Sheet G002 For Additional Information.

GENERAL NOTES

1. All Conduit Sweeps Shall Not Be Less Than 10 Times The Inside Diameter Of The Conduit.
2. Provide Warning Tape Above All Duct Banks.
3. Provide (3) 1-1/2" Innerducts In One Of The Active Conduits Per Ductbank. Provide Pull Cords In Each Spare Conduit And Each Spare Inner Duct Per Duct Bank.
4. Provide A #6 Ground Wire Along All Underground Conduit Routing. All Grounds Shall Be Tied In At Manhole Locations.
5. Provide A 5/8 Inch X 10 Foot Ground Rod At Each Manhole Location. Attached A #2 Solid Tinned Ground Conductor From The Ground Rod To The Bonding Ribbon In The Manhole.
6. All Manhole Locations And Ductbank Routings Shall Be Coordinated With Existing Underground Utilities And Infrastructure.
7. Contractor Shall Obtain A Private Mark Out Of The Area Of Work. Contractor Also To Coordinate With Local Utility Companies And New Jersey One Call (811) As Required By Those Entities To Identify And Mark Out All Buried Infrastructure And Utilities In The Vicinity Of Proposed Conduit Routing Prior To Any Excavation. Hand Digging In Certain Locations Is Highly Recommended.
8. Coordinate Routing Of Underground Duct Banks With Existing Field Conditions.

PARTIAL SYMBOLS & ABBREVIATIONS

Identifier	Description
	Existing Manhole
	New Manhole
	Remove Existing Fiber And Pull New Fiber Through Empty Conduit Pathway
	Existing Conduit Pathway Available For New Fiber Installation
	No Existing Fiber Available - New Duct Bank, Trenching, And New Fiber Required
#	Building To Building Span Number

Identifier	Description
	Detail Identifier
GXXX / ##	Drawing # (Detail Location) / Detail #
A	Photo Identification Tag
MDF	Main Distribution Frame
MH	Manhole
MH#XX	Manhole Identification Tag
POE	Point Of Entry
WCH	Wall-Mounted Connector Housing

CAMPUS FIBER PART PLAN

Scale: 1/64"=1'-0"

16' 32' 64' 128'

Drawing: FA007
Detail: 01

ITEM	DATE	ISSUE DESCRIPTION	ITEM	DATE	ISSUE DESCRIPTION
1	09/18/19	ISSUED FOR BID			

30x42

dlb associates
CONSULTING ENGINEERS, P.C.
265 Industrial Way West, Eatontown, N.J. 07724
Questions For DLB Call: Anthony Laskosky
DLB Project ID: 47211 Phone: 732-927-5038

project
TCNJ - CAMPUS FIRE ALARM
CABLE INFRASTRUCTURE UPGRADES
2000 PENNINGTON ROAD,
EWING NJ, 08618

title
CAMPUS CONDUIT ROUTING PLAN
ZONE 3

scale	drawn by	checked by	date
AS SHOWN	SC	SG	09/18/2019

dwg. no.
FA007

This Drawing Is The Property Of DLB Associates Consulting Engineers, PC. It Was Prepared Exclusively For This Particular Project And Is Limited To This Project Only. Unauthorized Reproduction Or Other Use Of These Drawings Or Ideas Is Prohibited.

Confidential and Proprietary / ©DLB Associates 2019

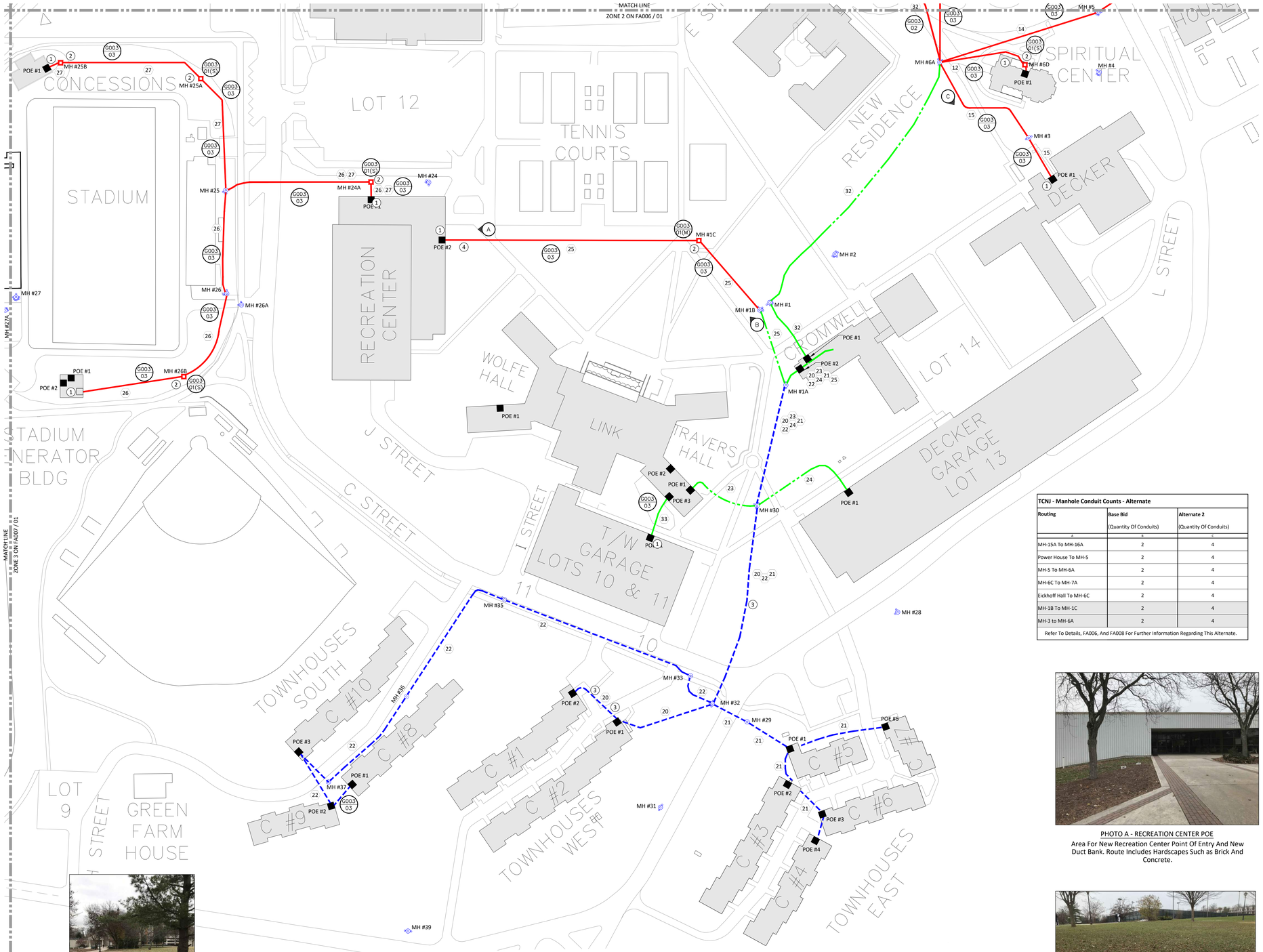

TCNJ - Manhole Conduit Counts - Alternate		
Routing	**Base Bid** (Quantity Of Conduits)	**Alternate 2** (Quantity Of Conduits)
A	B	C
MH-15A To MH-16A	2	4
Power House To MH-5	2	4
MH-5 To MH-6A	2	4
MH-6C To MH-7A	2	4
Eickhoff Hall To MH-6C	2	4
MH-1B To MH-1C	2	4
MH-3 to MH-6A	2	4
Refer To Details, FA006, And FA008 For Further Information Regarding This Alternate.		

PHOTO A - RECREATION CENTER POE

Area For New Recreation Center Point Of Entry And New Duct Bank. Route Includes Hardscapes Such as Brick And Concrete.

PHOTO C - Outside Decker Hall

Area For New Duct Bank Routing Located Outside Decker Hall. Route Includes Hardscapes Such As Brick And Concrete.

PHOTO B - Outside Tennis Field

Area For New Manhole And Duct Bank Routing Located Outside Tennis Field. Route Includes Hardscapes Such As Brick And Concrete.

Fiber Routing					
Span ID	**Starting Building**	**Ending Building**	**Empty Conduit**	**Hybrid Cable To Be Installed**	
				Base Bid	**Alternate #1**
1	Armstrong Hall**	STEM Building	Yes	12/12	
2	Bliss Hall	Kendall Hall	Yes	12/12	48/48
3	Business Building	Kendall Hall	No	12/12	24/24
4	Trenton Hall	Kendall Hall	No	12/12	36/36
5	Music Building	Kendall Hall	No	12/12	24/24
	AIMM Building	Kendall Hall	N/A	0*	
6	Social Science	Kendall Hall	Yes	12/12	36/36
	Kendall Hall	Green Hall	Yes		144/144
	Chemestry Building	STEM Building	N/A	0*	
	Physics Building	STEM Building	N/A	0*	
	Biology Building	STEM Building	N/A	0*	
	STEM Building	Green Hall	N/A	0*	
8	Forcina Hall	Roscoe Hall	Yes	12/12	24/24
	Education Building	Roscoe Hall	N/A	0*	
9	Centennial Hall	Roscoe Hall	No	12/12	24/24
10	Gitenstein Library	Roscoe Hall	No	12/12	36/36
11	Roscoe Hall	Green Hall	No	12/12	96/96
	Norsworthy Hall	Ely-Allen-Brewster	N/A	0*	
12	Spiritual Center	Ely-Allen-Brewster	No	12/12	
13	Maintenance Building	Powerhouse	Yes	12/12	24/24
14	Powerhouse	Ely-Allen-Brewster	No	12/12	48/48
15	Decker Hall	Ely-Allen-Brewster	No	12/12	36/36
16	Ely-Allen-Brewster**	Green Hall	No	12/12	144/144
17	New Residence Hall	Eickhoff Hall	No	12/12	24/24
18	Packer Hall	Eickhoff Hall	No	12/12	36/36
	Brower Student Center	Eickhoff Hall	N/A	0*	
19	Eickhoff Hall	Green Hall	No	12/12	96/96
20	TH1 (Town House West)	Cromwell Hall	No	48/48	
21	THS 21A/B (Town House East	Cromwell Hall	No	(2) 36/36	
22	TH9 (Town House South)	Cromwell Hall	No	48/48	
23	Travers Hall	Cromwell Hall	Yes	12/12	
	Wolfe Hall	Cromwell Hall	N/A	0*	
24	Decker Garage	Cromwell Hall	Yes	12/12	
25	Recreation Center	Cromwell Hall	No	12/12	36/36
26	Stadium Generator Building	Recreation Center	No	12/12	
27	Stadium Concession Stand	Recreation Center	No	12/12	
28	Soccer Field Press Box 28A/B	Admin Splice	No	24/24	36/36
29	Metzger Garage	Admin Splice	No	24/24	
	Phelps Hall	Admin Splice	N/A	0*	
	Hausdoerffer Hall	Admin Splice	N/A	0*	
32	Cromwell Hall	Green Hall	No	12/12	144/144
33	Travers/Wolfe Garage	Travers Hall	Yes	12/12	
34	Forcina Garage	Education Building	No	12/12	
35	Fire Pump House	Admin Services Building	No	12/12	
36	Admin Services Building	Admin Splice	N/A	36/36	
41	Eickhoff Room 227	Eickhoff Room 337	No	-	48/48

KEY NOTES (SYMBOLS 1, 2, ETC.)

1. New Point Of Entry From New Duct Bank Into Building. Core Drill Wall As Required For Conduit Entry. Coordinate Exact POE Location With Field Conditions.
2. New Manhole To Be Installed In This Location. See Sheet G003 / 01 For More Details.
3. Contractor Shall Coordinate With College IT Department To Disconnect The Existing Fiber Cable Before Pulling Out Cable. Once The Cable Has Been Disconnected And Removed, Contractor Shall Utilize Pathway To Pull In Replacement Fiber Cable.
4. Remove And Replace Trees, Bushes And Shrubbery In Order To Install Undergound Conduit. Coordinate With TCNJ. See Sheet G002 For Additional Information.

GENERAL NOTES

1. All Conduit Sweeps Shall Not Be Less Than 10 Times The Inside Diameter Of The Conduit.
2. Provide Warning Tape Above All Duct Banks.
3. Provide (3) 1-1/2" Innerducts In One Of The Active Conduits Per Ductbank. Provide Pull Cords In Each Spare Conduit And Each Spare Inner Duct Per Duct Bank.
4. Provide A #6 Ground Wire Along All Underground Conduit Routing. All Grounds Shall Be Tied In At Manhole Locations.
5. Provide A 5/8 Inch X 10 Foot Ground Rod At Each Manhole Location. Attached A #2 Solid Tinned Ground Conductor From The Ground Rod To The Bonding Ribbon In The Manhole.
6. All Manhole Locations And Ductbank Routings Shall Be Coordinated With Existing Underground Utilities And Infrastructure.
7. All Ductbanks Shall Be Encased In Flowable Fill.
8. Contractor Shall Obtain A Private Mark Out Of The Area Of Work. Contractor Also To Coordinate With Local Utility Companies And New Jersey One Call (811) As Required By Those Entities To Identify And Mark Out All Buried Infrastructure And Utilities In The Vicinity Of Proposed Conduit Routing Prior To Any Excavation. Hand Digging In Certain Locations Is Highly Recommended.
9. Coordinate Routing Of Underground Duct Banks With Existing Field Conditions.

PARTIAL SYMBOLS & ABBREVIATIONS

Identifier	Description
	Existing Manhole
	New Manhole
	Remove Existing Fiber And Pull New Fiber Through Empty Conduit Pathway
	Existing Conduit Pathway Available For New Fiber Installation
	No Existing Fiber Available - New Duct Bank, Trenching, And New Fiber Required
#	Building To Building Span ID

Identifier	Description
	Detail Identifier
XXXX / ##	Drawing # (Detail Location) Detail #
#	Photo Identification Tag
MDF	Main Distribution Frame
MH	Manhole
MH#XX	Manhole Identification Tag
POE	Point Of Entry
WCH	Wall-Mounted Connector Housing

CAMPUS FIBER PART PLAN

Scale: 1/64"=1'-0" 16' 32' 64' 128'

Drawing: **FA008**
Detail: **01**

ITEM	DATE	ISSUE DESCRIPTION	ITEM	DATE	ISSUE DESCRIPTION
1	09/18/19	ISSUED FOR BID			

30x42

dlb associates
CONSULTING ENGINEERS, P.C.
265 Industrial Way West, Eatontown, N.J. 07724
Questions For DLB Call: **Anthony Laskosky**
DLB Project ID: 47211 Phone: 732-927-5038

project
TCNJ - CAMPUS FIRE ALARM
CABLE INFRASTRUCTURE UPGRADES
2000 PENNINGTON ROAD,
EWING NJ, 08618

title
CAMPUS CONDUIT ROUTING PLAN
ZONE 4

scale	drawn by	checked by	date
AS SHOWN	SC	SG	09/18/2019

dwg. no.
FA008

This Drawing Is The Property Of DLB Associates Consulting Engineers, PC. It Was Prepared Exclusively For This Particular Project And Is Limited To This Project Only. Unauthorized Reproduction Or Other Use Of These Drawings Or Ideas Is Prohibited.

Confidential and Proprietary / ©DLB Associates 2019

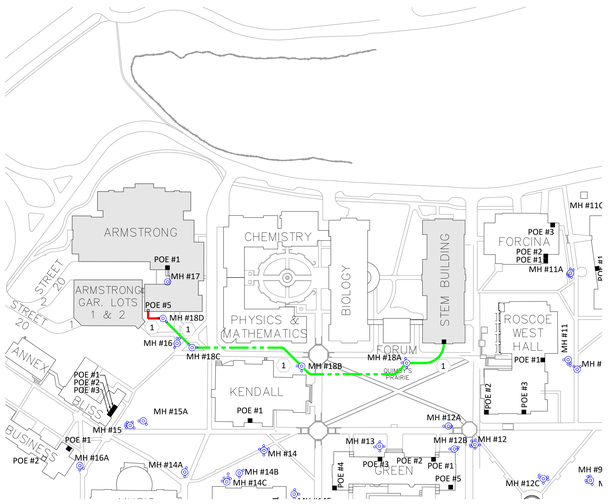

FIBER ROUTING - ARMSTRONG HALL TO STEM BUILDING | Scale: 1" = 150' | Drawing: **FA009** | Detail: **01**

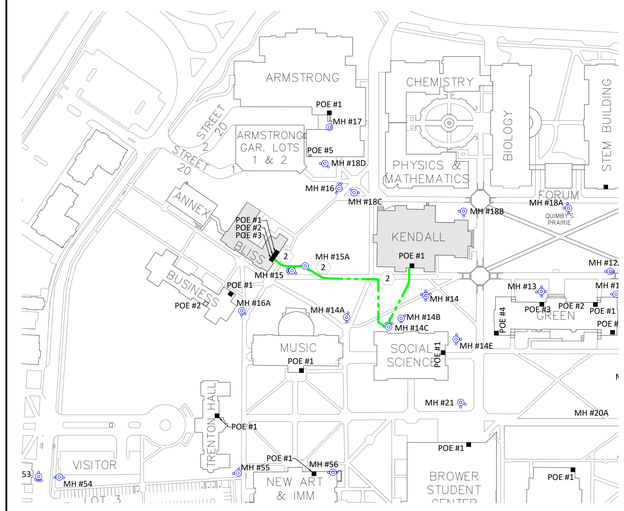

FIBER ROUTING - BLISS HALL & ANNEX TO KENDALL HALL | Scale: 1" = 150' | Drawing: **FA009** | Detail: **02**

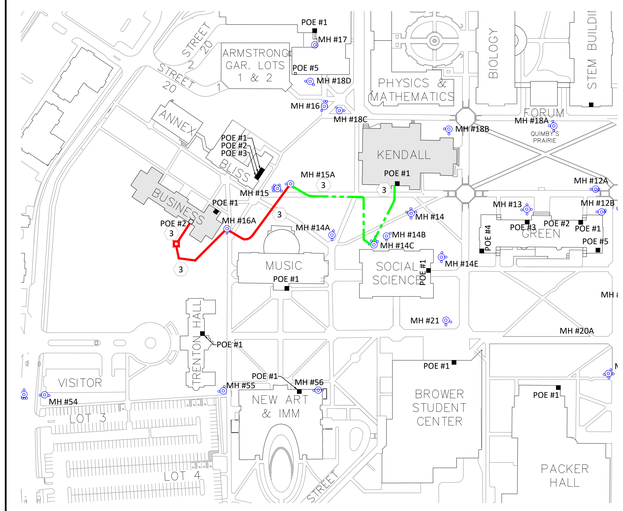

FIBER ROUTING - BUSINESS BUILDING TO KENDALL HALL | Scale: 1" = 150' | Drawing: **FA009** | Detail: **03**

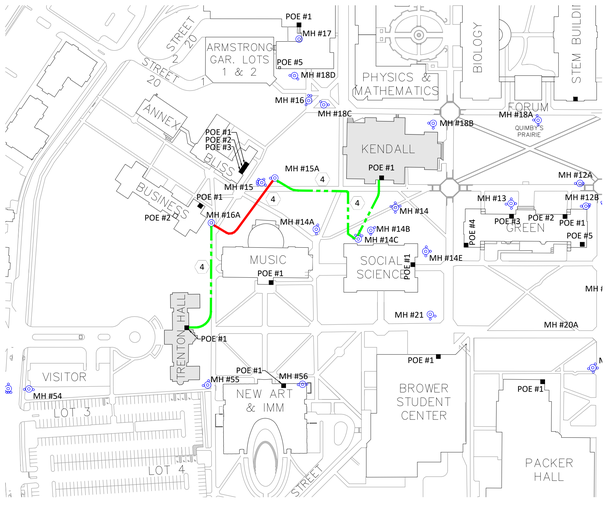

FIBER ROUTING - TRENTON HALL TO KENDALL HALL | Scale: 1" = 150' | Drawing: **FA009** | Detail: **04**

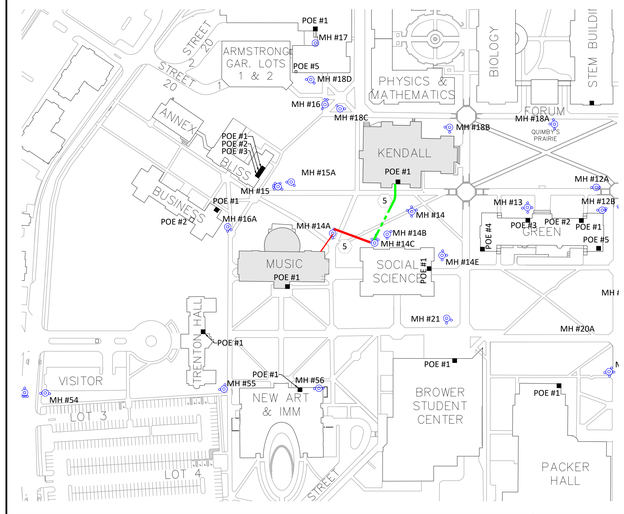

FIBER ROUTING - MUSIC BUILDING TO KENDALL HALL | Scale: 1" = 150' | Drawing: **FA009** | Detail: **05**

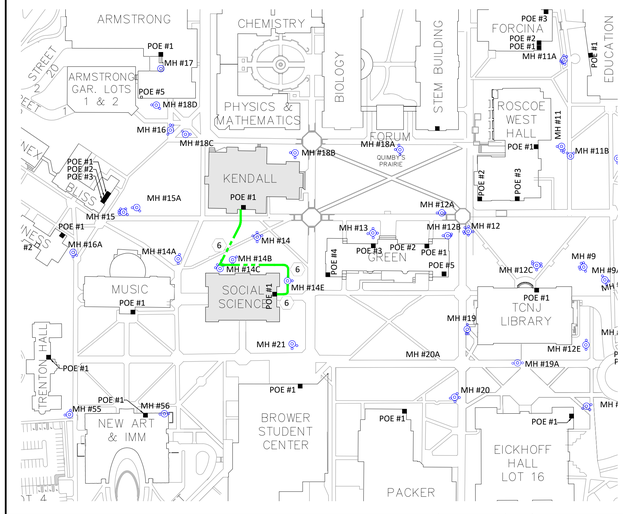

FIBER ROUTING - SOCIAL SCIENCE TO KENDALL HALL | Scale: 1" = 150' | Drawing: **FA009** | Detail: **06**

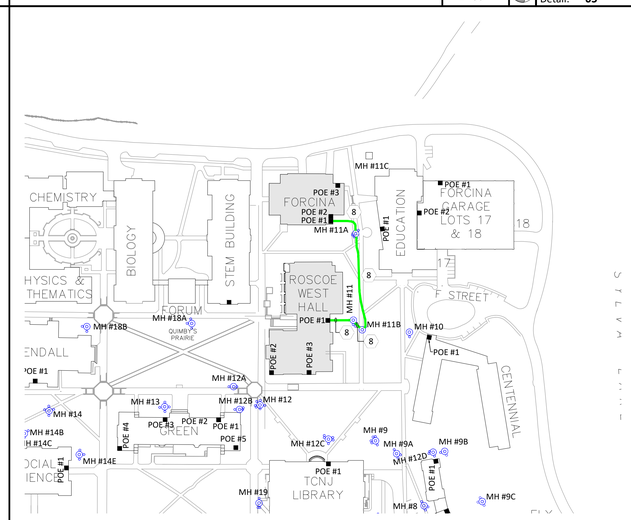

FIBER ROUTING - FORCINA HALL TO ROSCOE HALL | Scale: 1" = 150' | Drawing: **FA009** | Detail: **08**

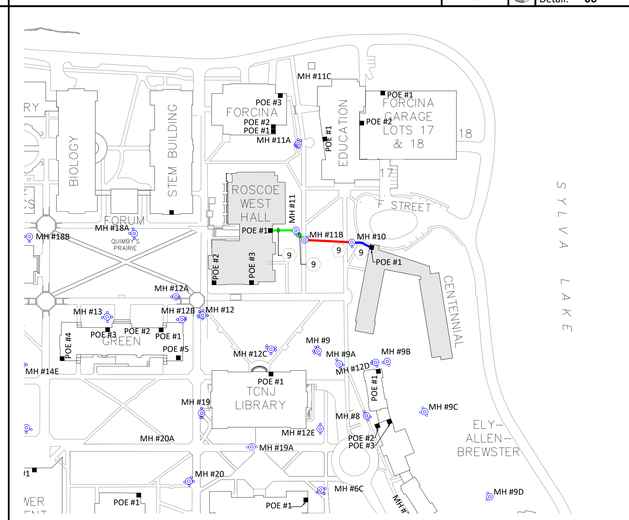

FIBER ROUTING - CENTENNIAL HALL TO ROSCOE HALL | Scale: 1" = 150' | Drawing: **FA009** | Detail: **09**

Fiber Routing

Span ID	Starting Building	Ending Building	Empty Conduit	Hybrid Cable To Be Installed	
				Base Bid	Alternate #1
1	Armstrong Hall**	STEM Building	Yes	12/12	
2	Bliss Hall	Kendall Hall	Yes	12/12	48/48
3	Business Building	Kendall Hall	No	12/12	24/24
4	Trenton Hall	Kendall Hall	No	12/12	36/36
5	Music Building	Kendall Hall	No	12/12	24/24
	AIMM Building	Kendall Hall	N/A	0*	
6	Social Science	Kendall Hall	Yes	12/12	36/36
	Kendall Hall	Green Hall	Yes		144/144
	Chemestry Building	STEM Building	N/A	0*	
	Physics Building	STEM Building	N/A	0*	
	Biology Building	STEM Building	N/A	0*	
	STEM Building	Green Hall	N/A	0*	
8	Forcina Hall	Roscoe Hall	Yes	12/12	24/24
	Education Building	Roscoe Hall	N/A	0*	
9	Centennial Hall	Roscoe Hall	No	12/12	24/24
10	Gitenstein Library	Roscoe Hall	No	12/12	36/36
11	Roscoe Hall	Green Hall	No	12/12	96/96
	Norsworthy Hall	Ely-Allen-Brewster	N/A	0*	
12	Spiritual Center	Ely-Allen-Brewster	No	12/12	
13	Maintenance Building	Powerhouse	Yes	12/12	24/24
14	Powerhouse	Ely-Allen-Brewster	No	12/12	48/48
15	Decker Hall	Ely-Allen-Brewster	No	12/12	36/36
16	Ely-Allen-Brewster**	Green Hall	No	12/12	144/144
17	New Residence Hall	Eickhoff Hall	No	12/12	24/24
18	Packer Hall	Eickhoff Hall	No	12/12	36/36
	Brower Student Center	Eickhoff Hall	N/A	0*	
19	Eickhoff Hall	Green Hall	No	12/12	96/96
20	TH1 (Town House West)	Cromwell Hall	No	48/48	
21	THS 21A/B (Town House East	Cromwell Hall	No	(2) 36/36	
22	TH9 (Town House South)	Cromwell Hall	No	48/48	
23	Travers Hall	Cromwell Hall	Yes	12/12	
	Wolfe Hall	Cromwell Hall	N/A	0*	
24	Decker Garage	Cromwell Hall	Yes	12/12	
25	Recreation Center	Cromwell Hall	No	12/12	36/36
26	Stadium Generator Building	Recreation Center	No	12/12	
27	Stadium Concession Stand	Recreation Center	No	12/12	
28	Soccer Field Press Box 28A/B	Admin Splice	No	24/24	36/36
29	Metzger Garage	Admin Splice	No	24/24	
	Phelps Hall	Admin Splice	N/A	0*	
	Hausdoerffer Hall	Admin Splice	N/A	0*	
32	Cromwell Hall	Green Hall	No	12/12	144/144
33	Travers/Wolfe Garage	Travers Hall	Yes	12/12	
34	Forcina Garage	Education Building	No	12/12	
35	Fire Pump House	Admin Services Building	No	12/12	
36	Admin Services Building	Admin Splice	N/A	36/36	
41	Eickhoff Room 227	Eickhoff Room 337	No	-	48/48

GENERAL NOTES

1. This Sheets Purpose Is To Show The Fiber Pathway Between Buildings Where New Fiber Will Be Provided. See FA005-F008 For Further Campus Routing Information. See The Building Drawing Series For Further Building Routing Information.
2. Each Fiber Run To Be One Continuous Run From MDF To MDF Without Any Splices.

PARTIAL SYMBOLS & ABBREVIATIONS

Identifier	Description
	Existing Manhole
	New Manhole
	Remove Existing Fiber And Pull New Fiber Through Empty Conduit Pathway
	Existing Conduit Pathway Available For New Fiber Installation
	No Existing Fiber Available - New Duct Bank, Trenching, And New Fiber Required
#	Building To Building Span Number

ITEM	DATE	ISSUE DESCRIPTION	ITEM	DATE	ISSUE DESCRIPTION
1	09/18/19	ISSUED FOR BID			

30x42

dlb associates
CONSULTING ENGINEERS, P.C.
265 Industrial Way West, Eatontown, N.J. 07724
Questions For DLB Call: **Anthony Laskosky**
DLB Project ID: 47211 Phone: 732-927-5038

project
TCNJ - CAMPUS FIRE ALARM
CABLE INFRASTRUCTURE UPGRADES
2000 PENNINGTON ROAD,
EWING NJ, 08618

title
BUILDING FIBER ROUTING

scale	drawn by	checked by	date
AS SHOWN	SC	SG	09/18/2019

dwg. no.
FA009

This Drawing Is The Property Of DLB Associates Consulting Engineers, PC. It Was Prepared Exclusively For This Particular Project And Is Limited To This Project Only. Unauthorized Reproduction Or Other Use Of These Drawings Or Ideas Is Prohibited.

Confidential and Proprietary / ©DLB Associates 2019

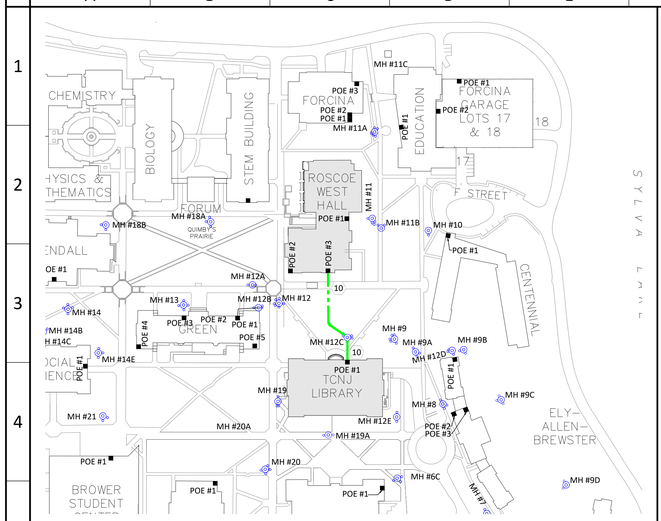

FIBER ROUTING - GITENSTEIN LIBRARY TO ROSCOE HALL | Scale: 1" = 150' | Drawing: **FA010** Detail: **01**

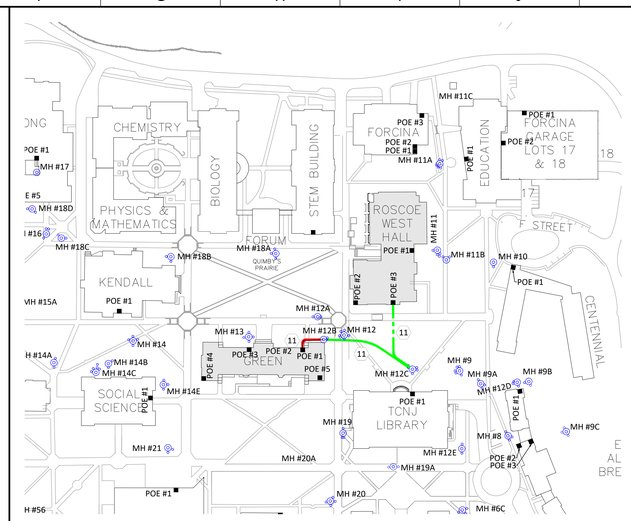

FIBER ROUTING - ROSCOE HALL TO GREEN HALL | Scale: 1" = 150' | Drawing: **FA010** Detail: **02**

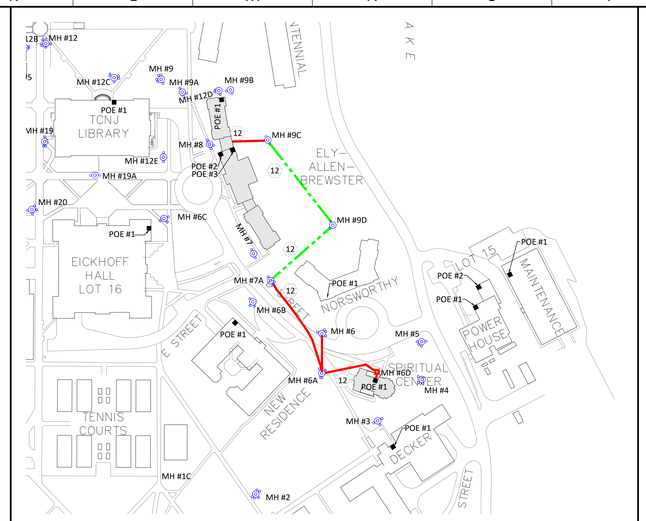

FIBER ROUTING - SPIRITUAL CENTER TO ELY-ALLEN-BREWSETER | Scale: 1" = 150' | Drawing: **FA010** Detail: **03**

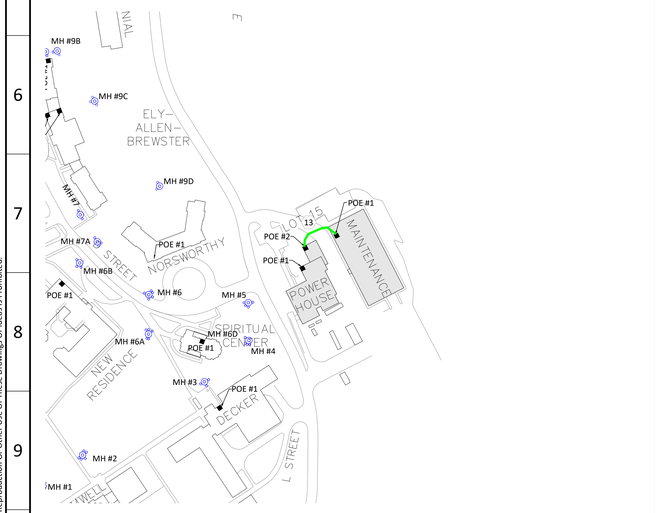

FIBER ROUTING - MAINTENANCE BUILDING TO POWERHOUSE | Scale: 1" = 150' | Drawing: **FA010** Detail: **04**

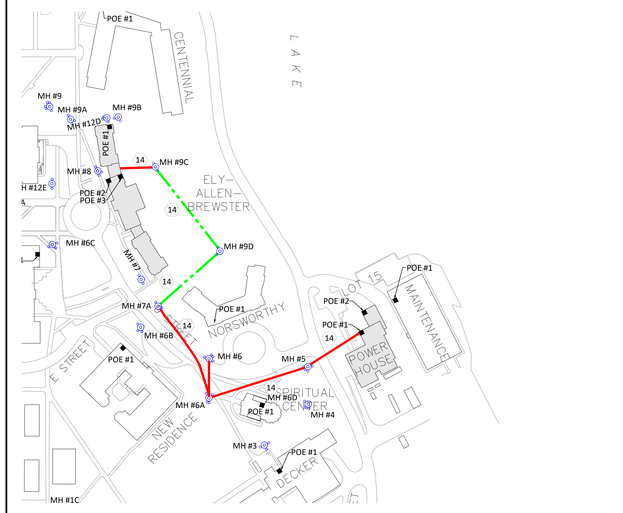

FIBER ROUTING - POWERHOUSE TO ELY-ALLEN-BREWSETER | Scale: 1" = 150' | Drawing: **FA010** Detail: **05**

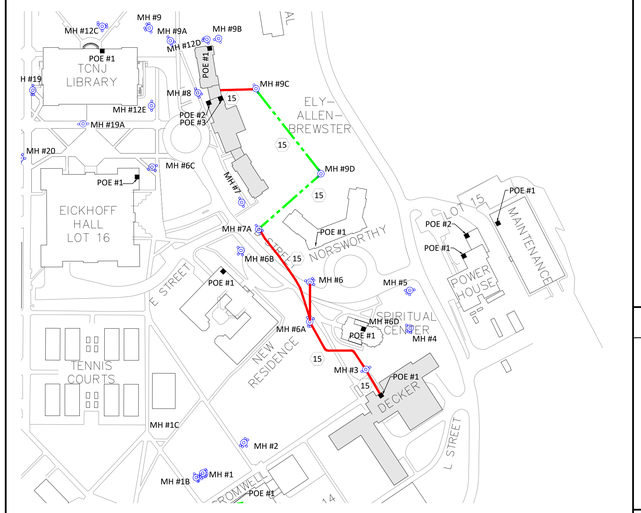

FIBER ROUTING - DECKER HALL TO ELY-ALLEN-BREWSETER | Scale: 1" = 150' | Drawing: **FA010** Detail: **06**

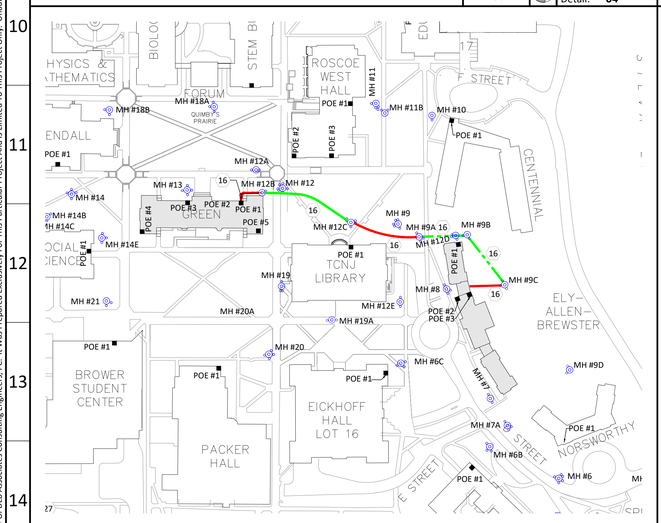

FIBER ROUTING - ELY-ALLEN-BREWSETER TO GREEN HALL | Scale: 1" = 150' | Drawing: **FA010** Detail: **07**

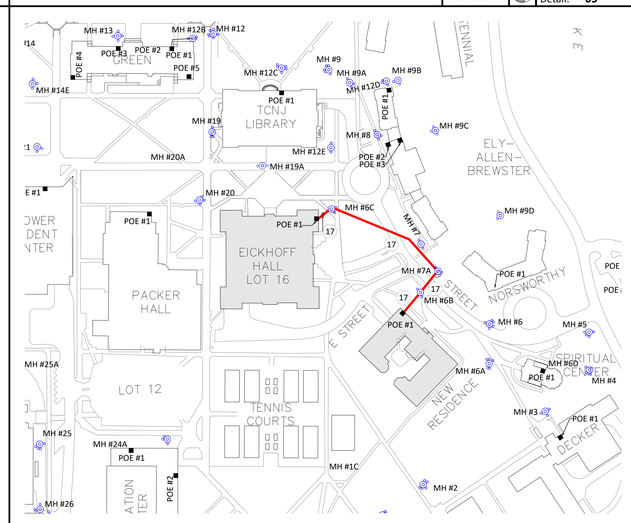

FIBER ROUTING - NEW RESIDENCE HALL TO EICKHOFF HALL | Scale: 1" = 150' | Drawing: **FA010** Detail: **08**

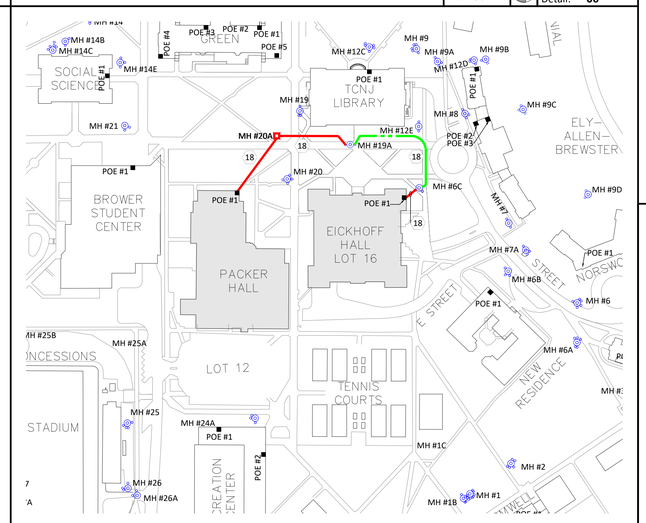

FIBER ROUTING - PACKER HALL TO EICKHOFF HALL | Scale: 1" = 150' | Drawing: **FA010** Detail: **09**

Fiber Routing

Span ID	Starting Building	Ending Building	Empty Conduit	Hybrid Cable To Be Installed	
				Base Bid	Alternate #1
1	Armstrong Hall**	STEM Building	Yes	12/12	
2	Bliss Hall	Kendall Hall	Yes	12/12	48/48
3	Business Building	Kendall Hall	No	12/12	24/24
4	Trenton Hall	Kendall Hall	No	12/12	36/36
5	Music Building	Kendall Hall	No	12/12	24/24
	AIMM Building	Kendall Hall	N/A	0*	
6	Social Science	Kendall Hall	Yes	12/12	36/36
	Kendall Hall	Green Hall	Yes		144/144
	Chemestry Building	STEM Building	N/A	0*	
	Physics Building	STEM Building	N/A	0*	
	Biology Building	STEM Building	N/A	0*	
	STEM Building	Green Hall	N/A	0*	
8	Forcina Hall	Roscoe Hall	Yes	12/12	24/24
	Education Building	Roscoe Hall	N/A	0*	
9	Centennial Hall	Roscoe Hall	No	12/12	24/24
10	Gitenstein Library	Roscoe Hall	No	12/12	36/36
11	Roscoe Hall	Green Hall	No	12/12	96/96
	Norsworthy Hall	Ely-Allen-Brewster	N/A	0*	
12	Spiritual Center	Ely-Allen-Brewster	No	12/12	
13	Maintenance Building	Powerhouse	Yes	12/12	24/24
14	Powerhouse	Ely-Allen-Brewster	No	12/12	48/48
15	Decker Hall	Ely-Allen-Brewster	No	12/12	36/36
16	Ely-Allen-Brewster**	Green Hall	No	12/12	144/144
17	New Residence Hall	Eickhoff Hall	No	12/12	24/24
18	Packer Hall	Eickhoff Hall	No	12/12	36/36
	Brower Student Center	Eickhoff Hall	N/A	0*	
19	Eickhoff Hall	Green Hall	No	12/12	96/96
20	TH1 (Town House West)	Cromwell Hall	No	48/48	
21	TH5 21A/B (Town House East	Cromwell Hall	No	(2) 36/36	
22	TH9 (Town House South)	Cromwell Hall	No	48/48	
23	Travers Hall	Cromwell Hall	Yes	12/12	
	Wolfe Hall	Cromwell Hall	N/A	0*	
24	Decker Garage	Cromwell Hall	Yes	12/12	
25	Recreation Center	Cromwell Hall	No	12/12	36/36
26	Stadium Generator Building	Recreation Center	No	12/12	
27	Stadium Concession Stand	Recreation Center	No	12/12	
28	Soccer Field Press Box 28A/B	Admin Splice	No	24/24	36/36
29	Metzger Garage	Admin Splice	No	24/24	
	Phelps Hall	Admin Splice	N/A	0*	
	Hausdoerffer Hall	Admin Splice	N/A	0*	
32	Cromwell Hall	Green Hall	No	12/12	144/144
33	Travers/Wolfe Garage	Travers Hall	Yes	12/12	
34	Forcina Garage	Education Building	No	12/12	
35	Fire Pump House	Admin Services Building	No	12/12	
36	Admin Services Building	Admin Splice	N/A	36/36	
41	Eickhoff Room 227	Eickhoff Room 337	No	-	48/48

GENERAL NOTES

1. This Sheets Purpose Is To Show The Fiber Pathway Between Buildings Where New Fiber Will Be Provided. See FA005-F008 For Further Campus Routing Information. See The Building Drawing Series For Further Building Routing Information.
2. Each Fiber Run To Be One Continuous Run From MDF To MDF Without Any Splices.

PARTIAL SYMBOLS & ABBREVIATIONS

Identifier	Description
	Existing Manhole
	New Manhole
	Existing Conduit Pathway Available For New Fiber Installation
	No Existing Fiber Available - New Duct Bank, Trenching, And New Fiber Required
#	Building To Building Span Number

This Drawing Is The Property Of DLB Associates Consulting Engineers, PC. It Was Prepared Exclusively For This Particular Project And Is Limited To This Project Only. Unauthorized Reproduction Or Other Use Of These Drawings Or Ideas Is Prohibited.

30x42

ITEM	DATE	ISSUE DESCRIPTION	ITEM	DATE	ISSUE DESCRIPTION
1	09/18/19	ISSUED FOR BID			

dlb associates
CONSULTING ENGINEERS, P.C.
265 Industrial Way West, Eatontown, N.J. 07724
Questions For DLB Call: **Anthony Laskosky**
DLB Project ID: 47211 Phone: 732-927-5038

project
TCNJ - CAMPUS FIRE ALARM
CABLE INFRASTRUCTURE UPGRADES
2000 PENNINGTON ROAD,
EWING NJ, 08618

title
BUILDING FIBER ROUTING

scale	drawn by	checked by	date
AS SHOWN	SC	SG	09/18/2019

dwg. no.
FA010

Confidential and Proprietary / ©DLB Associates 2019

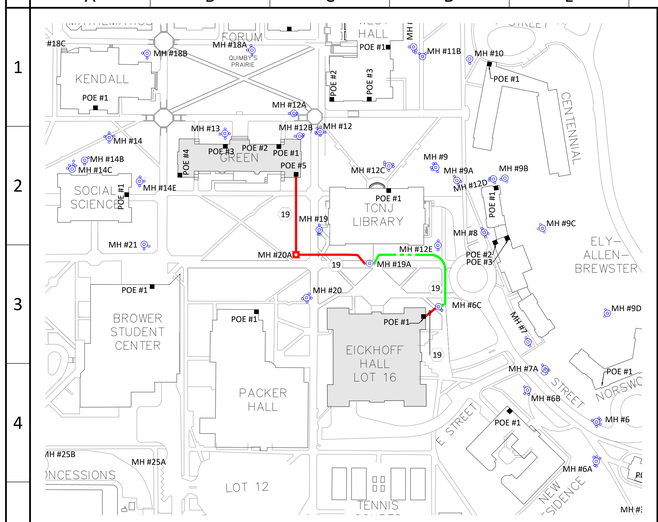

FIBER ROUTING - EICKHOFF HALL TO GREEN HALL | Scale: 1" = 150' | Drawing: **FA011** | Detail: **01**

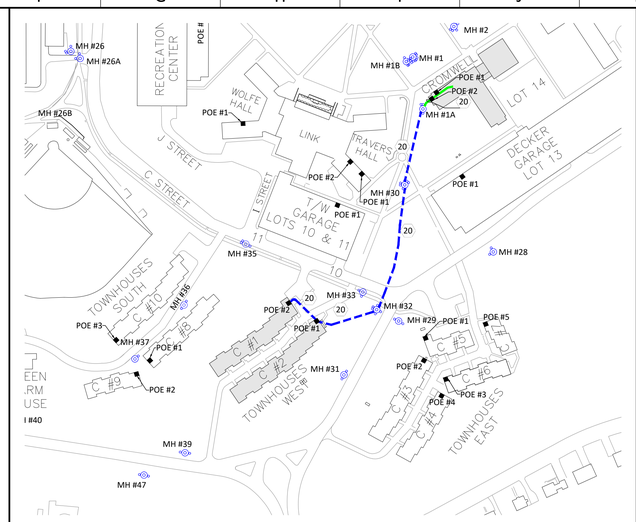

FIBER ROUTING - TOWN HOUSE WEST TO CROMWELL HALL | Scale: 1" = 150' | Drawing: **FA011** | Detail: **02**

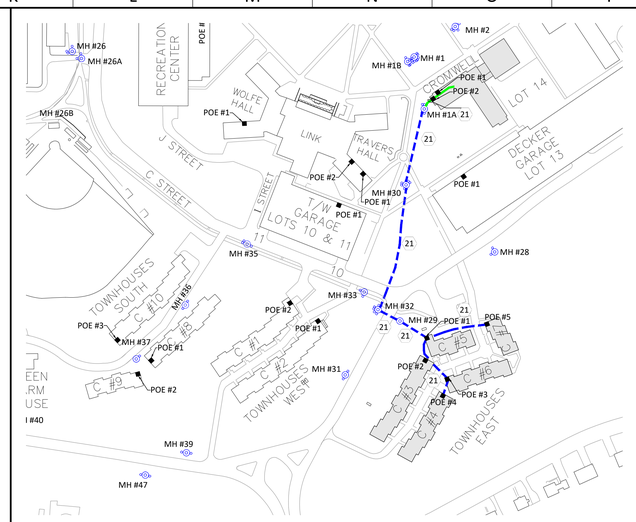

FIBER ROUTING - TOWN HOUSE EAST TO CROMWELL HALL | Scale: 1" = 150' | Drawing: **FA011** | Detail: **03**

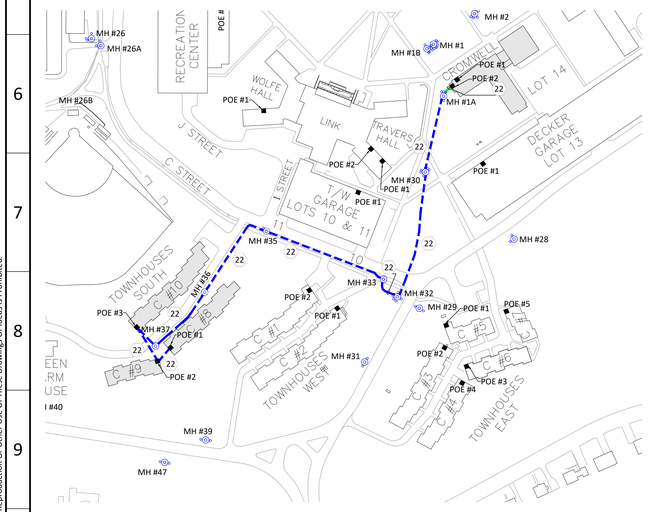

FIBER ROUTING - TOWN HOUSE SOUTH TO CROMWELL HALL | Scale: 1" = 150' | Drawing: **FA011** | Detail: **04**

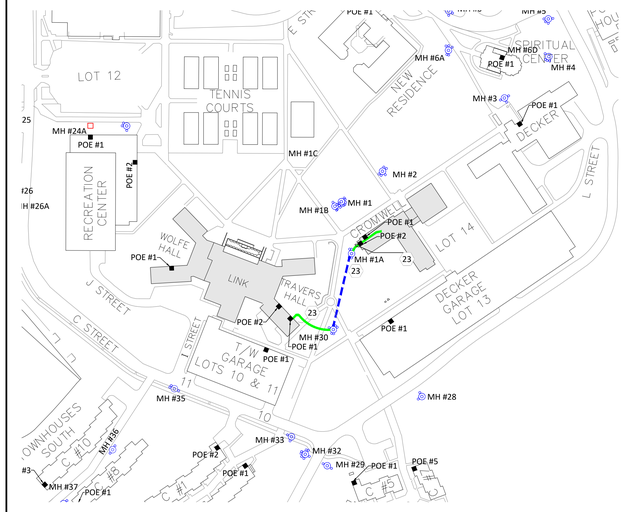

FIBER ROUTING - TRAVERS HALL TO CROMWELL HALL | Scale: 1" = 150' | Drawing: **FA011** | Detail: **05**

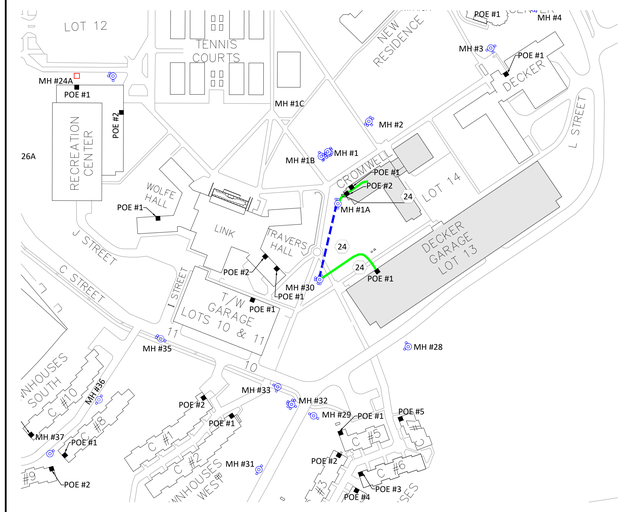

FIBER ROUTING - DECKER GARAGE TO CROMWELL HALL | Scale: 1" = 150' | Drawing: **FA011** | Detail: **06**

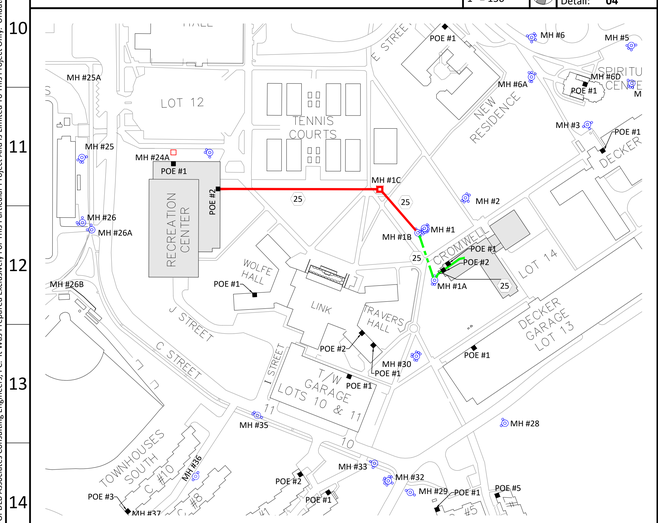

FIBER ROUTING - RECREATION CENTER TO CROMWELL HALL | Scale: 1" = 150' | Drawing: **FA011** | Detail: **07**

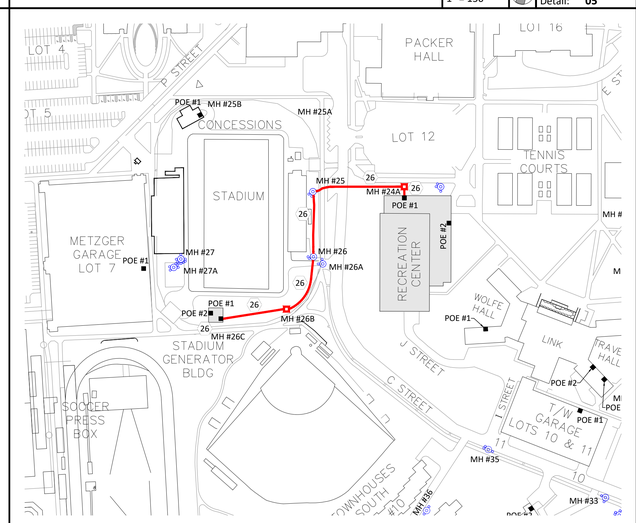

FIBER ROUTING - STADIUM GENERATOR BUILDING TO RECREATION CENTER | Scale: 1" = 150' | Drawing: **FA011** | Detail: **08**

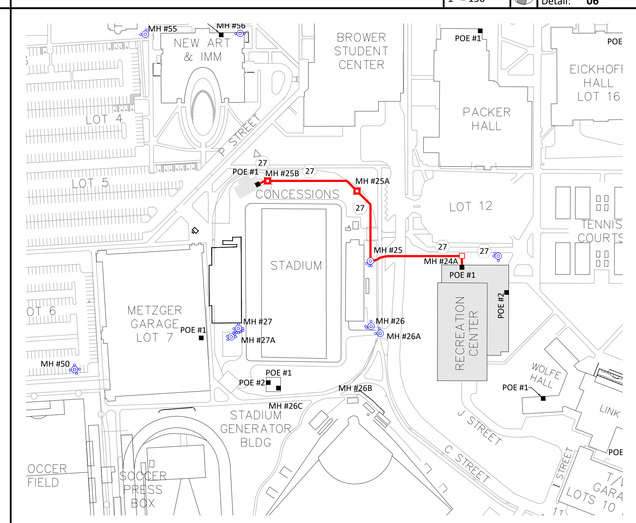

FIBER ROUTING - STADIUM CONCESSION STAND TO RECREATION CENTER | Scale: 1" = 150' | Drawing: **FA011** | Detail: **09**

Fiber Routing

Span ID	Starting Building	Ending Building	Empty Conduit	Hybrid Cable To Be Installed	
				Base Bid	Alternate #1
1	Armstrong Hall**	STEM Building	Yes	12/12	
2	Bliss Hall	Kendall Hall	Yes	12/12	48/48
3	Business Building	Kendall Hall	No	12/12	24/24
4	Trenton Hall	Kendall Hall	No	12/12	36/36
5	Music Building	Kendall Hall	No	12/12	24/24
	AIMM Building	Kendall Hall	N/A	0*	
6	Social Science	Kendall Hall	Yes	12/12	36/36
	Kendall Hall	Green Hall	Yes		144/144
	Chemestry Building	STEM Building	N/A	0*	
	Physics Building	STEM Building	N/A	0*	
	Biology Building	STEM Building	N/A	0*	
	STEM Building	Green Hall	N/A	0*	
8	Forcina Hall	Roscoe Hall	Yes	12/12	24/24
	Education Building	Roscoe Hall	N/A	0*	
9	Centennial Hall	Roscoe Hall	No	12/12	24/24
10	Gitenstein Library	Roscoe Hall	No	12/12	36/36
11	Roscoe Hall	Green Hall	No	12/12	96/96
	Norsworthy Hall	Ely-Allen-Brewster	N/A	0*	
12	Spiritual Center	Ely-Allen-Brewster	No	12/12	
13	Maintenance Building	Powerhouse	Yes	12/12	24/24
14	Powerhouse	Ely-Allen-Brewster	No	12/12	48/48
15	Decker Hall	Ely-Allen-Brewster	No	12/12	36/36
16	Ely-Allen-Brewster**	Green Hall	No	12/12	144/144
17	New Residence Hall	Eickhoff Hall	No	12/12	24/24
18	Packer Hall	Eickhoff Hall	No	12/12	36/36
	Brower Student Center	Eickhoff Hall	N/A	0*	
19	Eickhoff Hall	Green Hall	No	12/12	96/96
20	TH1 (Town House West)	Cromwell Hall	No	48/48	
21	THS 21A/B (Town House East	Cromwell Hall	No	(2) 36/36	
22	TH9 (Town House South)	Cromwell Hall	No	48/48	
23	Travers Hall	Cromwell Hall	Yes	12/12	
	Wolfe Hall	Cromwell Hall	N/A	0*	
24	Decker Garage	Cromwell Hall	Yes	12/12	
25	Recreation Center	Cromwell Hall	No	12/12	36/36
26	Stadium Generator Building	Recreation Center	No	12/12	
27	Stadium Concession Stand	Recreation Center	No	12/12	
28	Soccer Field Press Box 28A/B	Admin Splice	No	24/24	36/36
29	Metzger Garage	Admin Splice	No	24/24	
	Phelps Hall	Admin Splice	N/A	0*	
	Hausdoerffer Hall	Admin Splice	N/A	0*	
32	Cromwell Hall	Green Hall	No	12/12	144/144
33	Travers/Wolfe Garage	Travers Hall	Yes	12/12	
34	Forcina Garage	Education Building	No	12/12	
35	Fire Pump House	Admin Services Building	No	12/12	
36	Admin Services Building	Admin Splice	N/A	36/36	
41	Eickhoff Room 227	Eickhoff Room 337	No	-	48/48

GENERAL NOTES

1. This Sheets Purpose Is To Show The Fiber Pathway Between Buildings Where New Fiber Will Be Provided. See FA005-F008 For Further Campus Routing Information. See The Building Drawing Series For Further Building Routing Information.
2. Each Fiber Run To Be One Continuous Run From MDF To MDF Without Any Splices.

PARTIAL SYMBOLS & ABBREVIATIONS

Identifier	Description
	Existing Manhole
	New Manhole
	Remove Existing Fiber And Pull New Fiber Through Empty Conduit Pathway
	Existing Conduit Pathway Available For New Fiber Installation
	No Existing Fiber Available - New Duct Bank, Trenching, And New Fiber Required
#	Building To Building Span Number

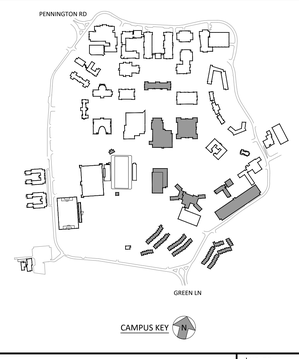

ITEM	DATE	ISSUE DESCRIPTION	ITEM	DATE	ISSUE DESCRIPTION
1	09/18/19	ISSUED FOR BID			

30x42

dlb associates
CONSULTING ENGINEERS, P.C.
265 Industrial Way West, Eatontown, N.J. 07724
Questions For DLB Call: **Anthony Laskosky**
DLB Project ID: 47211 Phone: 732-927-5038

project
TCNJ - CAMPUS FIRE ALARM
CABLE INFRASTRUCTURE UPGRADES
2000 PENNINGTON ROAD,
EWING NJ, 08618

title
BUILDING FIBER ROUTING

scale	drawn by	checked by	date
AS SHOWN	SC	SG	09/18/2019

dwg. no.
FA011

This Drawing Is The Property Of DLB Associates Consulting Engineers, PC. It Was Prepared Exclusively For This Particular Project And Is Limited To This Project Only. Unauthorized Reproduction Or Other Use Of These Drawings Or Ideas Is Prohibited.

Confidential and Proprietary / ©DLB Associates 2019

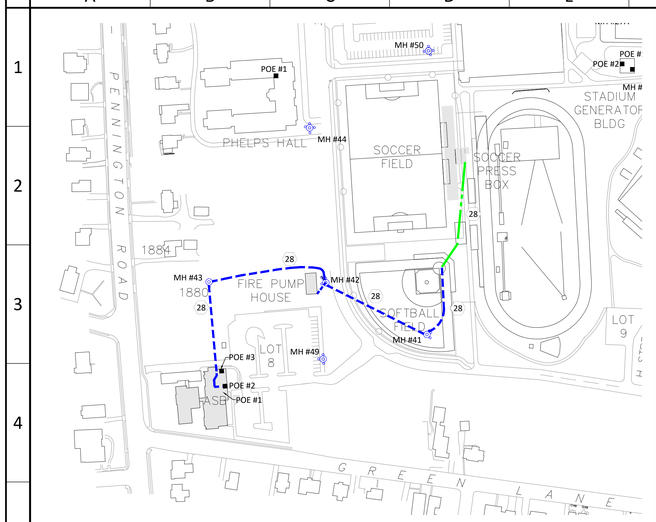

FIBER ROUTING - SOCCER FIELD PRESS BOX TO ADMINISTRATIVE SERVICES BLDG | Scale: 1" = 150' | Drawing: **FA012** | Detail: **01**

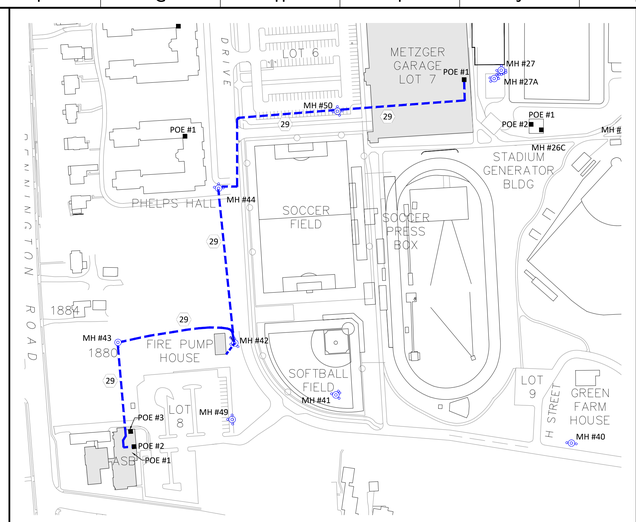

FIBER ROUTING - METZGER GARAGE TO ADMINISTRATIVE SERVICES BUILDING | Scale: 1" = 150' | Drawing: **FA012** | Detail: **02**

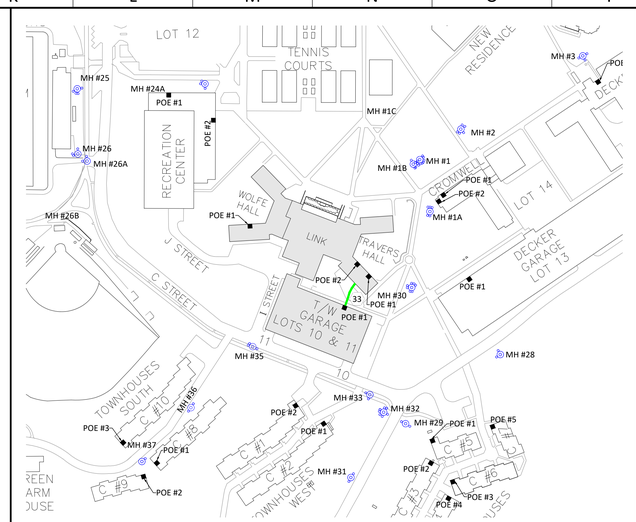

FIBER ROUTING - TRAVERS/WOLFE GARAGE TO WOLFE HALL | Scale: 1" = 150' | Drawing: **FA012** | Detail: **03**

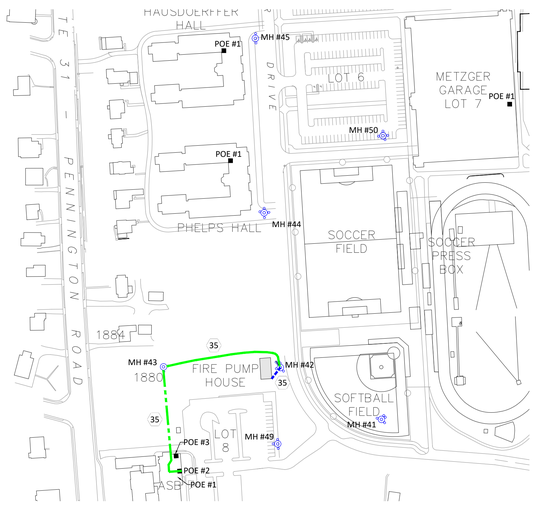

FIBER ROUTING - FIRE PUMP HOUSE TO ADMIN SPLICE | Drawing: **FA012** | Detail: **04**

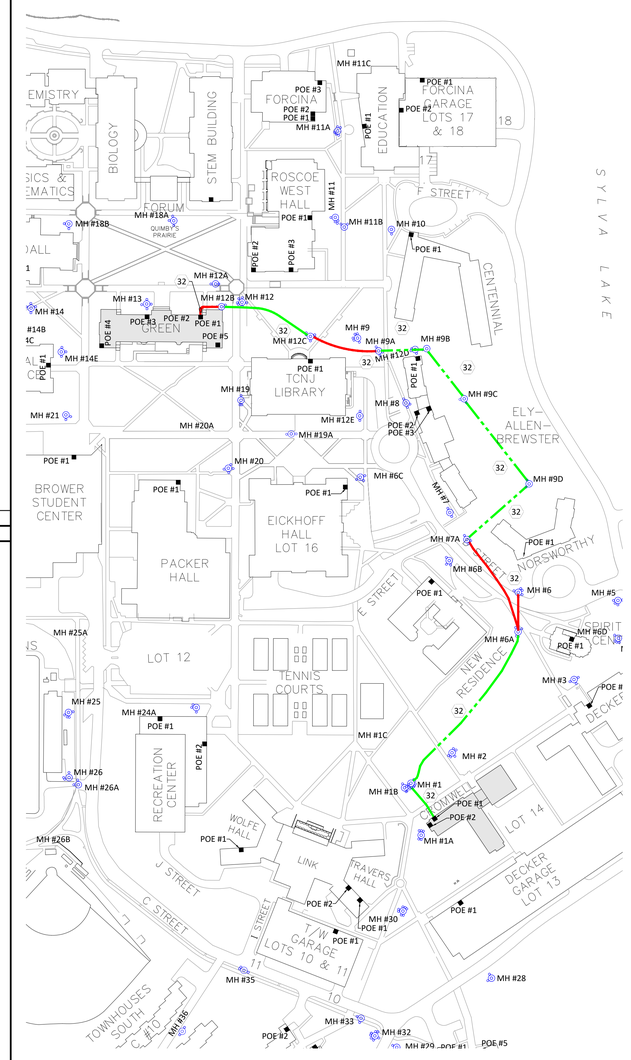

FIBER ROUTING - CROMWELL HALL TO GREEN HALL | Scale: 1" = 150' | Drawing: **FA012** | Detail: **05**

Fiber Routing

Span ID	Starting Building	Ending Building	Empty Conduit	Hybrid Cable To Be Installed	
				Base Bid	Alternate #1
1	Armstrong Hall**	STEM Building	Yes	12/12	
2	Bliss Hall	Kendall Hall	Yes	12/12	48/48
3	Business Building	Kendall Hall	No	12/12	24/24
4	Trenton Hall	Kendall Hall	No	12/12	36/36
5	Music Building	Kendall Hall	No	12/12	24/24
	AIMM Building	Kendall Hall	N/A	0*	
6	Social Science	Kendall Hall	Yes	12/12	36/36
	Kendall Hall	Green Hall	Yes		144/144
	Chemestry Building	STEM Building	N/A	0*	
	Physics Building	STEM Building	N/A	0*	
	Biology Building	STEM Building	N/A	0*	
	STEM Building	Green Hall	N/A	0*	
8	Forcina Hall	Roscoe Hall	Yes	12/12	24/24
	Education Building	Roscoe Hall	N/A	0*	
9	Centennial Hall	Roscoe Hall	No	12/12	24/24
10	Gitenstein Library	Roscoe Hall	No	12/12	36/36
11	Roscoe Hall	Green Hall	No	12/12	96/96
	Norsworthy Hall	Ely-Allen-Brewster	N/A	0*	
12	Spiritual Center	Ely-Allen-Brewster	No	12/12	
13	Maintenance Building	Powerhouse	Yes	12/12	24/24
14	Powerhouse	Ely-Allen-Brewster	No	12/12	48/48
15	Decker Hall	Ely-Allen-Brewster	No	12/12	36/36
16	Ely-Allen-Brewster**	Green Hall	No	12/12	144/144
17	New Residence Hall	Eickhoff Hall	No	12/12	24/24
18	Packer Hall	Eickhoff Hall	No	12/12	36/36
	Brower Student Center	Eickhoff Hall	N/A	0*	
19	Eickhoff Hall	Green Hall	No	12/12	96/96
20	TH1 (Town House West)	Cromwell Hall	No	48/48	
21	THS 21A/B (Town House East	Cromwell Hall	No	(2) 36/36	
22	TH9 (Town House South)	Cromwell Hall	No	48/48	
23	Travers Hall	Cromwell Hall	Yes	12/12	
	Wolfe Hall	Cromwell Hall	N/A	0*	
24	Decker Garage	Cromwell Hall	Yes	12/12	
25	Recreation Center	Cromwell Hall	No	12/12	36/36
26	Stadium Generator Building	Recreation Center	No	12/12	
27	Stadium Concession Stand	Recreation Center	No	12/12	
28	Soccer Field Press Box 28A/B	Admin Splice	No	24/24	36/36
29	Metzger Garage	Admin Splice	No	24/24	
	Phelps Hall	Admin Splice	N/A	0*	
	Hausdoerffer Hall	Admin Splice	N/A	0*	
32	Cromwell Hall	Green Hall	No	12/12	144/144
33	Travers/Wolfe Garage	Travers Hall	Yes	12/12	
34	Forcina Garage	Education Building	No	12/12	
35	Fire Pump House	Admin Services Building	No	12/12	
36	Admin Services Building	Admin Splice	N/A	36/36	
41	Eickhoff Room 227	Eickhoff Room 337	No	-	48/48

GENERAL NOTES

1. This Sheets Purpose Is To Show The Fiber Pathway Between Buildings Where New Fiber Will Be Provided. See FA005-F008 For Further Campus Routing Information. See The Building Drawing Series For Further Building Routing Information.
2. Each Fiber Run To Be One Continuous Run From MDF To MDF Without Any Splices.

PARTIAL SYMBOLS & ABBREVIATIONS

Identifier	Description
	Existing Manhole
	New Manhole
	Remove Existing Fiber And Pull New Fiber Through Empty Conduit Pathway
	Existing Conduit Pathway Available For New Fiber Installation
	No Existing Fiber Available - New Duct Bank, Trenching, And New Fiber Required
#	Building To Building Span Number

ITEM	DATE	ISSUE DESCRIPTION	ITEM	DATE	ISSUE DESCRIPTION
1	09/18/19	ISSUED FOR BID			

30x42

dlb associates
CONSULTING ENGINEERS, P.C.
265 Industrial Way West, Eatontown, N.J. 07724
Questions For DLB Call: **Anthony Laskosky**
DLB Project ID: 47211 Phone: 732-927-5038

project: TCNJ - CAMPUS FIRE ALARM CABLE INFRASTRUCTURE UPGRADES 2000 PENNINGTON ROAD, EWING NJ, 08618

title: BUILDING FIBER ROUTING

scale	drawn by	checked by	date
AS SHOWN	SC	SG	09/18/2019

dwg. no. FA012

This Drawing Is The Property Of DLB Associates Consulting Engineers, PC. It Was Prepared Exclusively For This Particular Project And Is Limited To This Project Only. Unauthorized Reproduction Or Other Use Of These Drawings Or Ideas Is Prohibited.

Confidential and Proprietary / ©DLB Associates 2019